LCFC Confidential

CE475 NM-A861 Rev1.0 Schematic

AMD Bristol Ridge Processor with DDR4

R16M-M1-30 with DDR3 4GB

2016-7-20 Rev1.0

Security Classification	LC Future Center Secret Data		
Issued Date	2015/10/5	Deciphered Date	2016/12/31

THIS SHEET OF ENGINEERING DRAWING IS THE PROPRIETARY PROPERTY OF LC FUTURE CENTER, AND CONTAINS CONFIDENTIAL AND TRADE SECRET INFORMATION. THIS SHEET MAY NOT BE TRANSFERED FROM THE CUSTODY OF THE COMPETENT DIVISION OF R&D DEPARTMENT EXCEPT AS AUTHORIZED BY LC FUTURE CENTER NEITHER THIS SHEET NOR THE INFORMATION IT CONTAINS MAY BE USED BY OR DISCLOSED TO ANY THIRD PARTY WITHOUT PRIOR WRITTEN CONSENT OF LC FUTURE CENTER.

Title: COVER PAGE

Size: Custom | Document Number: NM-A861 | Rev: 1.0

Date: Monday, August 01, 2016 | Sheet 1 of 80

AMD Bristol Ridge FP4

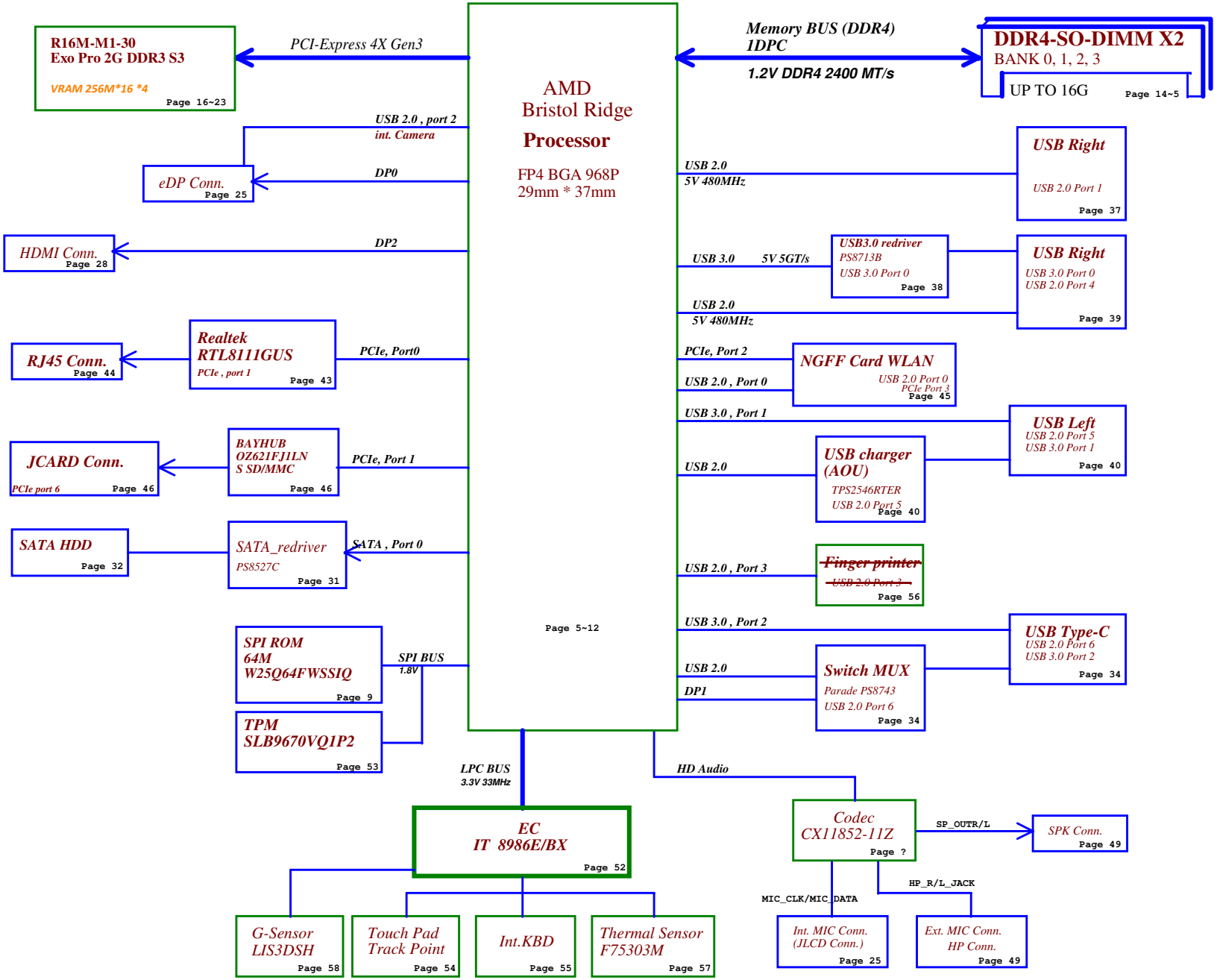

Security Classification	LC Future Center Secret Data		
Issued Date	2015/10/5	Deciphered Date	2016/12/31

THIS SHEET OF ENGINEERING DRAWING IS THE PROPRIETARY PROPERTY OF LC FUTURE CENTER. AND CONTAINS CONFIDENTIAL AND TRADE SECRET INFORMATION. THIS SHEET MAY NOT BE TRANSFERED FROM THE CUSTODY OF THE COMPETENT DIVISION OF R&D DEPARTMENT EXCEPT AS AUTHORIZED BY LC FUTURE CENTER NEITHER THIS SHEET NOR THE INFORMATION IT CONTAINS MAY BE USED BY OR DISCLOSED TO ANY THIRD PARTY WITHOUT PRIOR WRITTEN CONSENT OF LC FUTURE CENTER.

Title: BLOCK DIAGRAM

Size: C | Document Number: NM-A861 | Rev: 1.0

Date: Monday, August 01, 2016 | Sheet 2 of 80

Voltage Rails (O --> Means ON , X --> Means OFF)

Power Plane / State	B+	+3VALW +5VALW	+1.2V	+5VS +3VS +1.5VS +1.05VS +0.6VS +VCC_CORE +VGA_CORE +3.3VS_VGA +1.8VS_VGA +1.35VS_VGA +1.05VS_VGA
S0	O	O	O	O
S3	O	O	O	X
S5 S4/AC Only	O	O	X	X
S5 S4 Battery only	O	X	X	X
S5 S4 AC & Battery don't exist	X	X	X	X

STATE \ SIGNAL	SLP_A#	SLP_S3#	SLP_S4#	SLP_S5#	EC_ON	SUSP#
S0	HIGH	HIGH	HIGH	HIGH	ON	ON
S3 (Suspend to RAM)	LOW	LOW	HIGH	HIGH	ON	OFF
S4 (Suspend to Disk)	LOW	LOW	LOW	HIGH	ON	OFF
S5 (Soft OFF)	LOW	LOW	LOW	LOW	ON	OFF

USB2 Port

Port	Device
1	NGFF Card
2	USB port3
3	Int. Camera
4	Finger Printer
5	USB port1
6	USB(AOU)
7	USB Type-C
8	X

USB3 Port

Port	Device
1	USB port1
2	USB(AOU)
3	USB Type-C
4	X

PCIE Port

Port	Device
1	LAN
2	CardReader
3	WLAN
4	X
5	GPU
6	GPU
7	GPU
8	GPU
9	X
10	X
11	X
12	X

SATA Port

Port	Device
1	HDD
2	X

SMBUS Control Table

	SOURCE	Main VGA	BATT	SODIMM	WLAN WiMAX	Thermal Sensor	PCH	CP Module	Seccurity ROM	CCG2	G-Sensor
EC_SMB_CK1 EC_SMB_DA1	IT8986F +3VL	X	V +3VALW	X	X	X	X	X	X	X	X
EC_SMB_CK2 EC_SMB_DA2	IT8986F +3VS	X	X	X	X	X	X	X	X	V +3VALW	X
EC_SMB_CK3 EC_SMB_DA3	IT8986F +3VS	V +3VS_VGA	X	X	X	V +3VS	V +3VALW_PCH	X	X	X	V +3VALW

ZZZ1 PCB@

NM-A861
DA80000ZP00

THIS SHEET OF ENGINEERING DRAWING IS THE PROPRIETARY PROPERTY OF LC FUTURE CENTER, AND CONTAINS CONFIDENTIAL AND TRADE SECRET INFORMATION. THIS SHEET MAY NOT BE TRANSFERED FROM THE CUSTODY OF THE COMPETENT DIVISION OF R&D DEPARTMENT EXCEPT AS AUTHORIZED BY LC FUTURE CENTER NEITHER THIS SHEET NOR THE INFORMATION IT CONTAINS MAY BE USED BY OR DISCLOSED TO ANY THIRD PARTY WITHOUT PRIOR WRITTEN CONSENT OF LC FUTURE CENTER.

Security Classification	LC Future Center Secret Data		
Issued Date	2015/10/5	Deciphered Date	2016/12/31

Title: NOTE LIST

Size: C | Document Number: NM-A861 | Rev: 1.0

Date: Monday, August 01, 2016 | Sheet 3 of 80

VGA and DDR3 Voltage Rails (JET TOPAZ GPIO)

20151022

GPIO	I/O	ACTIVE	Function Description
GPIO0	OUT	N/A	
GPIO5	IN	-	GPIO5_AC_BATT
GPIO6	IN	-	GPIO6
GPIO7	OUT	N/A	
GPIO8	OUT	-	GPIO8_ROMSO
GPIO9	OUT	-	GPIO9_ROMSI
GPIO10	OUT	-	GPIO10_ROMSCK
GPIO11	OUT	N/A	
GPIO12	OUT	N/A	
GPIO13	OUT	N/A	
GPIO15	IN	N/A	SVI2_SVD
GPIO16	OUT	N/A	
GPIO17	OUT	N/A	
GPIO19	OUT	N/A	GPIO19_CTF
GPIO20	IN	IN	GPIO20
GPIO21	OUT	N/A	
GPIO22	OUT	N/A	GPIO22_ROMCSB
GPIO29	OUT	N/A	
GPIO30	OUT	N/A	

BOM Structure Table

BOM Structure	NOTE
EXO@	For GPU_EXO
MESO@	For GPU_MESO
DIS@	For GPU function
X76@	GPU VRAM Setting
TPM@	Trusted Platform Module(TPM)
UMA@	UMA SKU ID
DPRE@	DP re-driver function
SA@	SATA redriver function
RESA@	Disable SATA re-driver
HD@	HDMI repeater function
ME@	ME Connector
RF@	For RF function
EMC@	For EMI function
NVPRO@	For Non-VPRO function
VPRO@	For VPRO function
U31@	For U3 port1 redriver function
U32@	For U3 port2 redriver function
U33@	For U3 port3 redriver function
NU3R@	Bypass U3 port3 redriver
TYPEC@	TYPEC FUNCTION

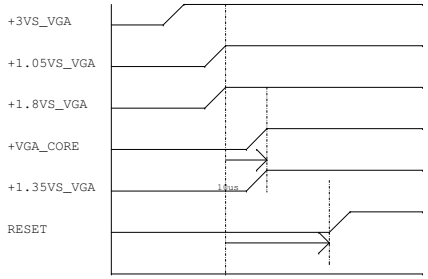

1. all power rail ramp up time should be within 20ms

	Device ID
JET-XT	0x6664
TOPAZ XT	0x6900

			RV104	RV105
Memory (GDDR3)				
Samsung	1G	SA22225SH30*4	PU 8.45K	PD 2K
	2G	SA000063F00*4	PU 3.4K	PD 10K
Hynix	1G	SA00005VS10*4	PU 4.53K	PD 2K
	2G	SA00005YL10*4	PU 4.75K	NC
Micron	1G	SA00005M100*4	NC	PD 4.75K
	2G	SA000060I00*4	PU 3.24K	PD 5.62K

Security Classification	LC Future Center Secret Data		
Issued Date	2015/10/5	Deciphered Date	2016/12/31

THIS SHEET OF ENGINEERING DRAWING IS THE PROPRIETARY PROPERTY OF LC FUTURE CENTER, AND CONTAINS CONFIDENTIAL AND TRADE SECRET INFORMATION. THIS SHEET MAY NOT BE TRANSFERED FROM THE CUSTODY OF THE COMPETENT DIVISION OF R&D DEPARTMENT EXCEPT AS AUTHORIZED BY LC FUTURE CENTER NEITHER THIS SHEET NOR THE INFORMATION IT CONTAINS MAY BE USED BY OR DISCLOSED TO ANY THIRD PARTY WITHOUT PRIOR WRITTEN CONSENT OF LC FUTURE CENTER.

Title: VGA NOTE

Size: C | Document Number: NM-A861 | Rev: 1.0

Date: Monday, August 01, 2016 | Sheet 4 of 80

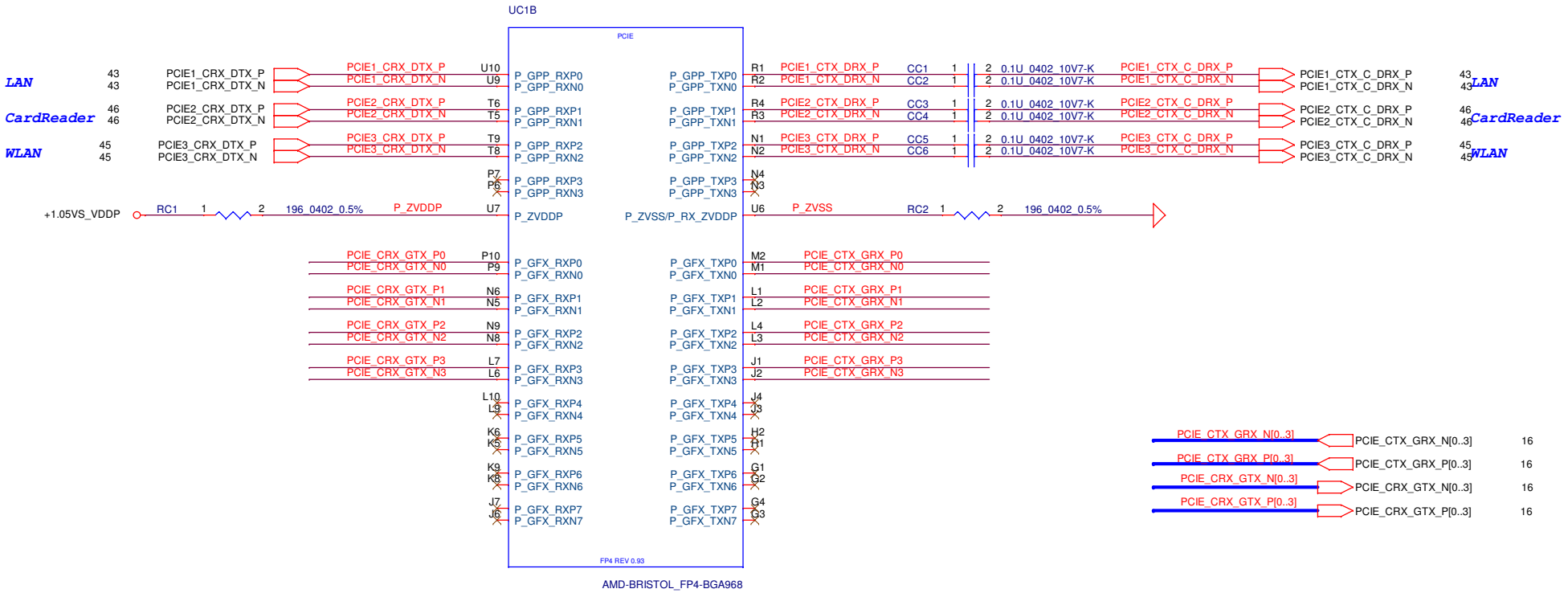

Security Classification	LC Future Center Secret Data		
Issued Date	2015/10/5	Deciphered Date	2014/12/05

THIS SHEET OF ENGINEERING DRAWING IS THE PROPRIETARY PROPERTY OF LC FUTURE CENTER. AND CONTAINS CONFIDENTIAL AND TRADE SECRET INFORMATION. THIS SHEET MAY NOT BE TRANSFERED FROM THE CUSTODY OF THE COMPETENT DIVISION OF R&D DEPARTMENT EXCEPT AS AUTHORIZED BY LC FUTURE CENTER NEITHER THIS SHEET NOR THE INFORMATION IT CONTAINS MAY BE USED BY OR DISCLOSED TO ANY THIRD PARTY WITHOUT PRIOR WRITTEN CONSENT OF LC FUTURE CENTER.

Title: APU PEG/PCIe

Size: B | Document Number: NM-A861 | Rev: 1.0

Date: Monday, August 01, 2016 | Sheet 5 of 80

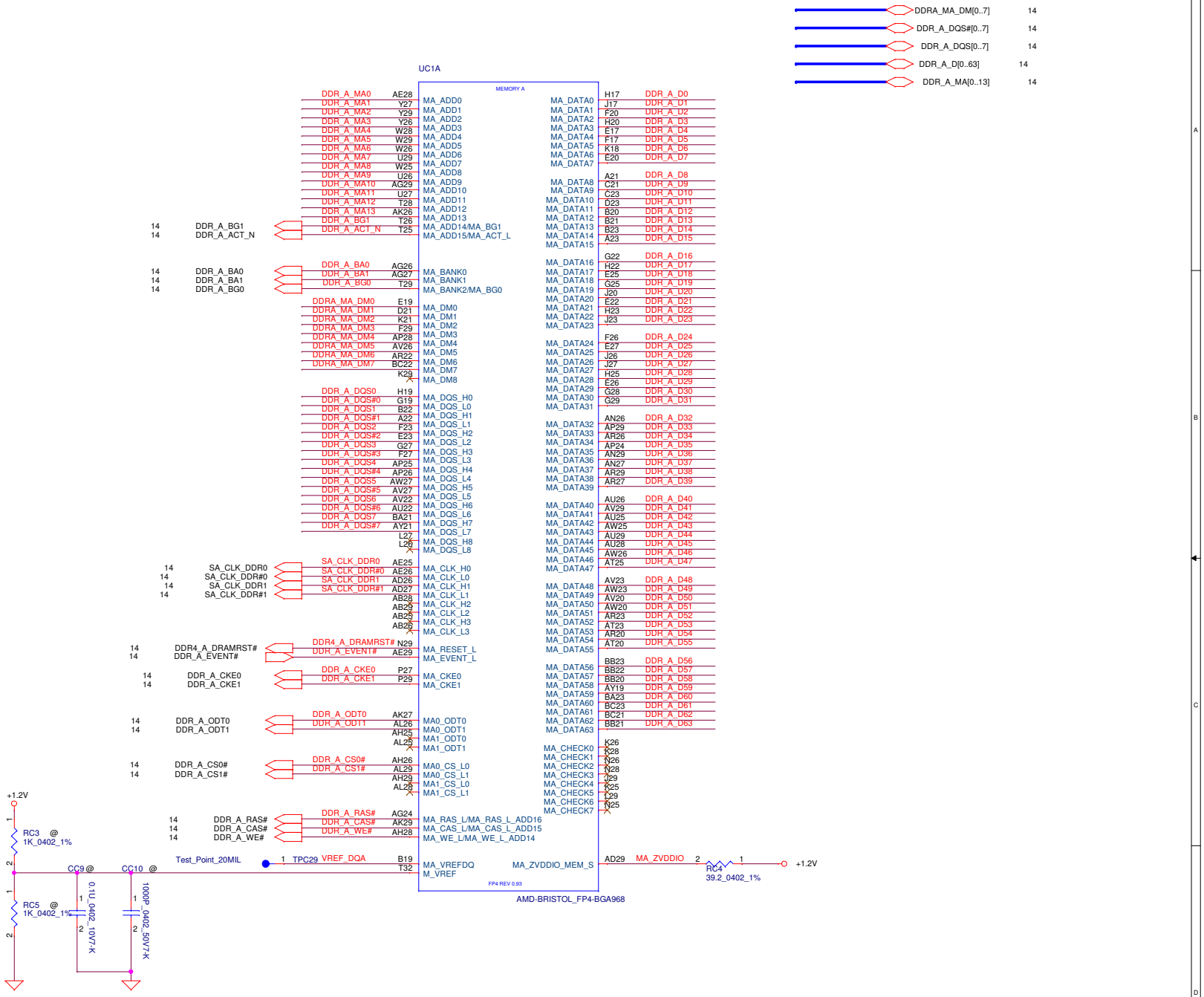

Security Classification	LC Future Center Secret Data		
Issued Date	2015/10/5	Deciphered Date	2014/07/01

THIS SHEET OF ENGINEERING DRAWING IS THE PROPRIETARY PROPERTY OF LC FUTURE CENTER. AND CONTAINS CONFIDENTIAL AND TRADE SECRET INFORMATION. THIS SHEET MAY NOT BE TRANSFERED FROM THE CUSTODY OF THE COMPETENT DIVISION OF R&D DEPARTMENT EXCEPT AS AUTHORIZED BY LC FUTURE CENTER NEITHER THIS SHEET NOR THE INFORMATION IT CONTAINS MAY BE USED BY OR DISCLOSED TO ANY THIRD PARTY WITHOUT PRIOR WRITTEN CONSENT OF LC FUTURE CENTER.

Title: APU DDRA/1

LCFC

Size: Custom | Document Number: NM-A861 | Rev: 1.0

Date: Monday, August 01, 2016 | Sheet 6 of 80

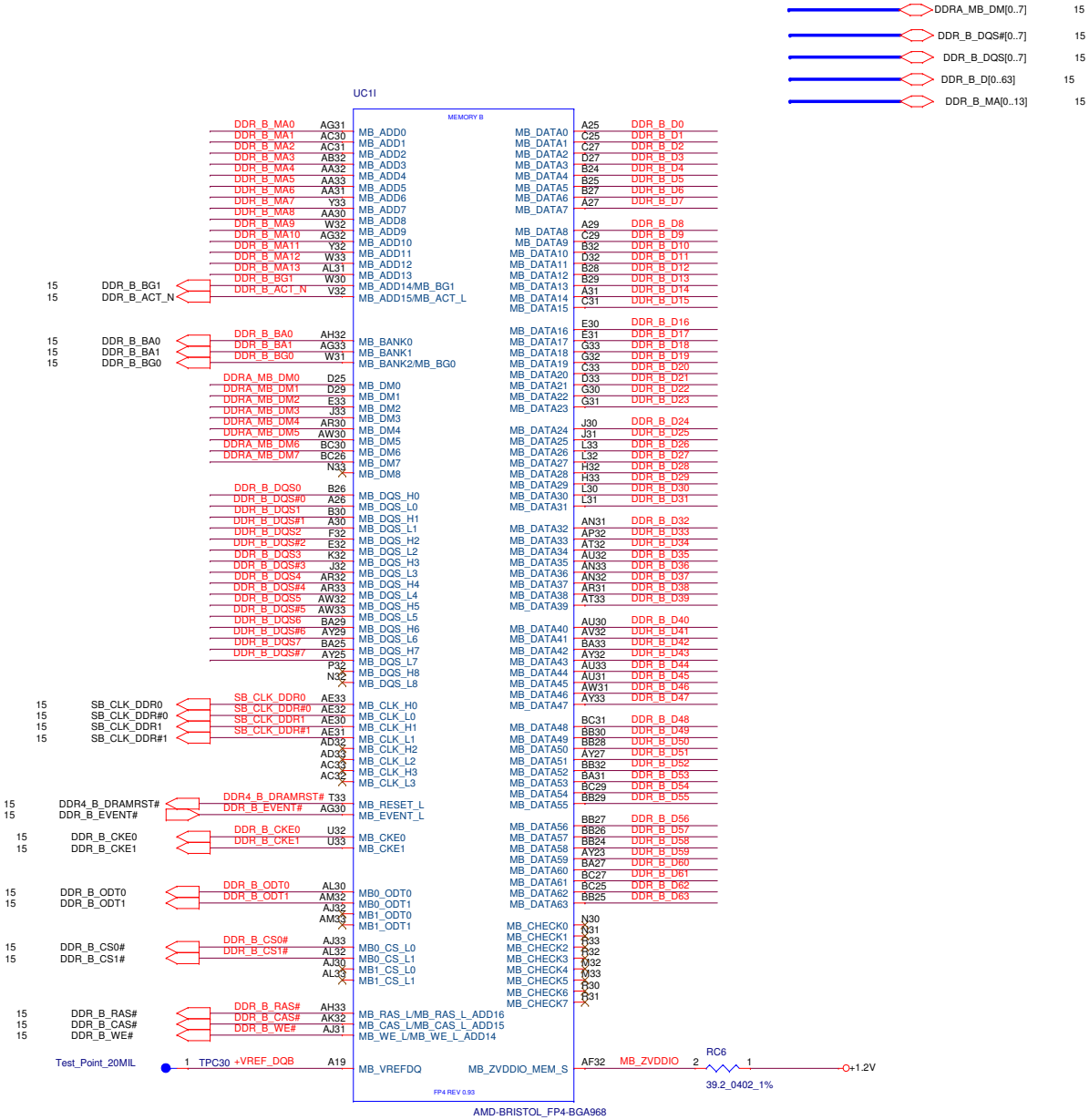

Security Classification	LC Future Center Secret Data		
Issued Date	2015/10/5	Deciphered Date	2014/07/01

THIS SHEET OF ENGINEERING DRAWING IS THE PROPRIETARY PROPERTY OF LC FUTURE CENTER. AND CONTAINS CONFIDENTIAL AND TRADE SECRET INFORMATION. THIS SHEET MAY NOT BE TRANSFERED FROM THE CUSTODY OF THE COMPETENT DIVISION OF R&D DEPARTMENT EXCEPT AS AUTHORIZED BY LC FUTURE CENTER NEITHER THIS SHEET NOR THE INFORMATION IT CONTAINS MAY BE USED BY OR DISCLOSED TO ANY THIRD PARTY WITHOUT PRIOR WRITTEN CONSENT OF LC FUTURE CENTER.

Title: **APU DDRB/2**

LCFC

Size: Custom | Document Number: NM-A861 | Rev: 1.0

Date: Monday, August 01, 2016 | Sheet 7 of 80

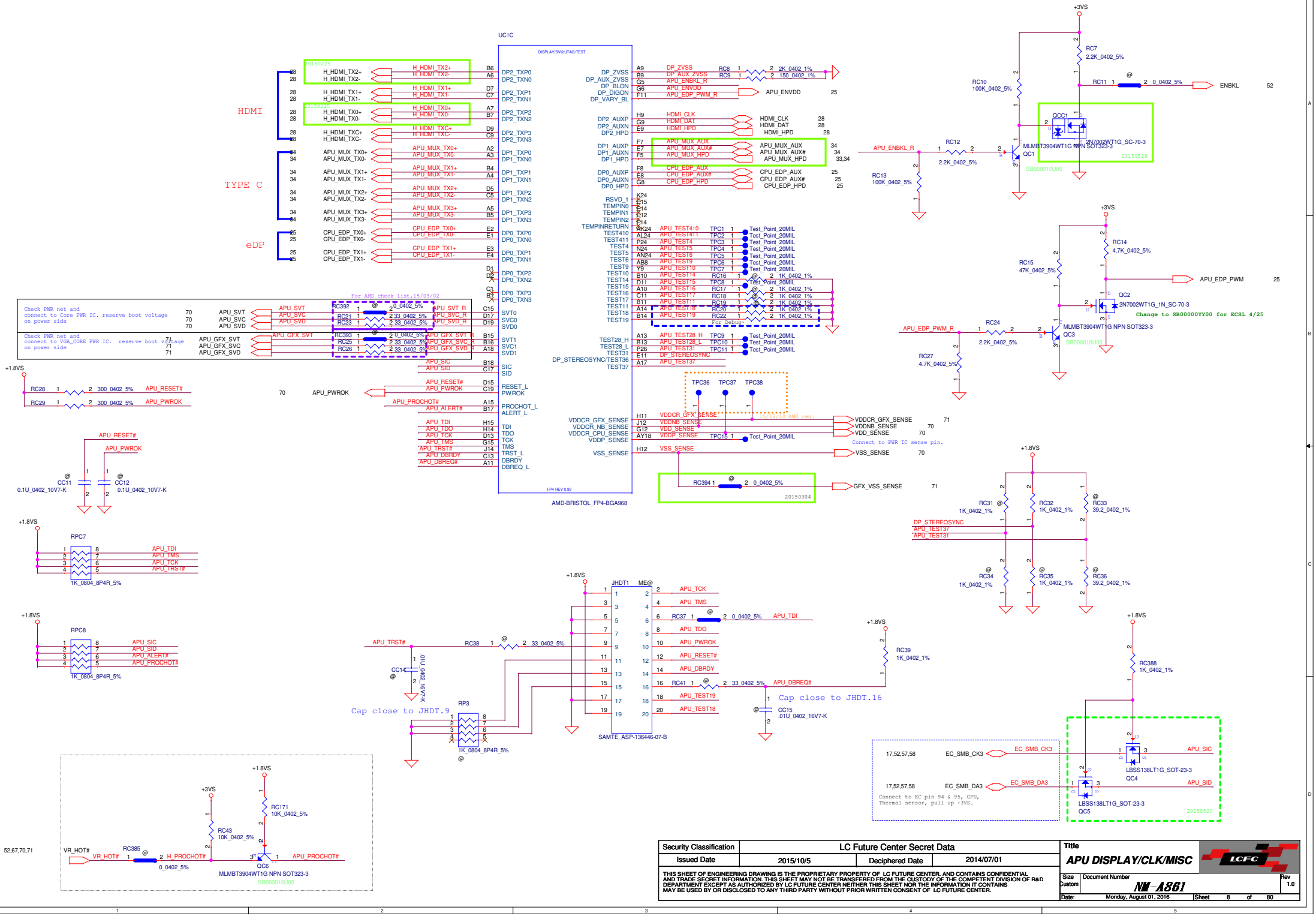

Security Classification	LC Future Center Secret Data		
Issued Date	2015/10/5	Deciphered Date	2014/07/01

THIS SHEET OF ENGINEERING DRAWING IS THE PROPRIETARY PROPERTY OF LC FUTURE CENTER. AND CONTAINS CONFIDENTIAL AND TRADE SECRET INFORMATION. THIS SHEET MAY NOT BE TRANSFERED FROM THE CUSTODY OF THE COMPETENT DIVISION OF R&D DEPARTMENT EXCEPT AS AUTHORIZED BY LC FUTURE CENTER NEITHER THIS SHEET NOR THE INFORMATION IT CONTAINS MAY BE USED BY OR DISCLOSED TO ANY THIRD PARTY WITHOUT PRIOR WRITTEN CONSENT OF LC FUTURE CENTER.

Title: **APU DISPLAY/CLK/MISC**

Size: Custom | Document Number: NM-A861 | Rev: 1.0

Date: Monday, August 01, 2016 | Sheet 8 of 80

USB Port Assignment

0 USB 3.0 System Port (AOU)

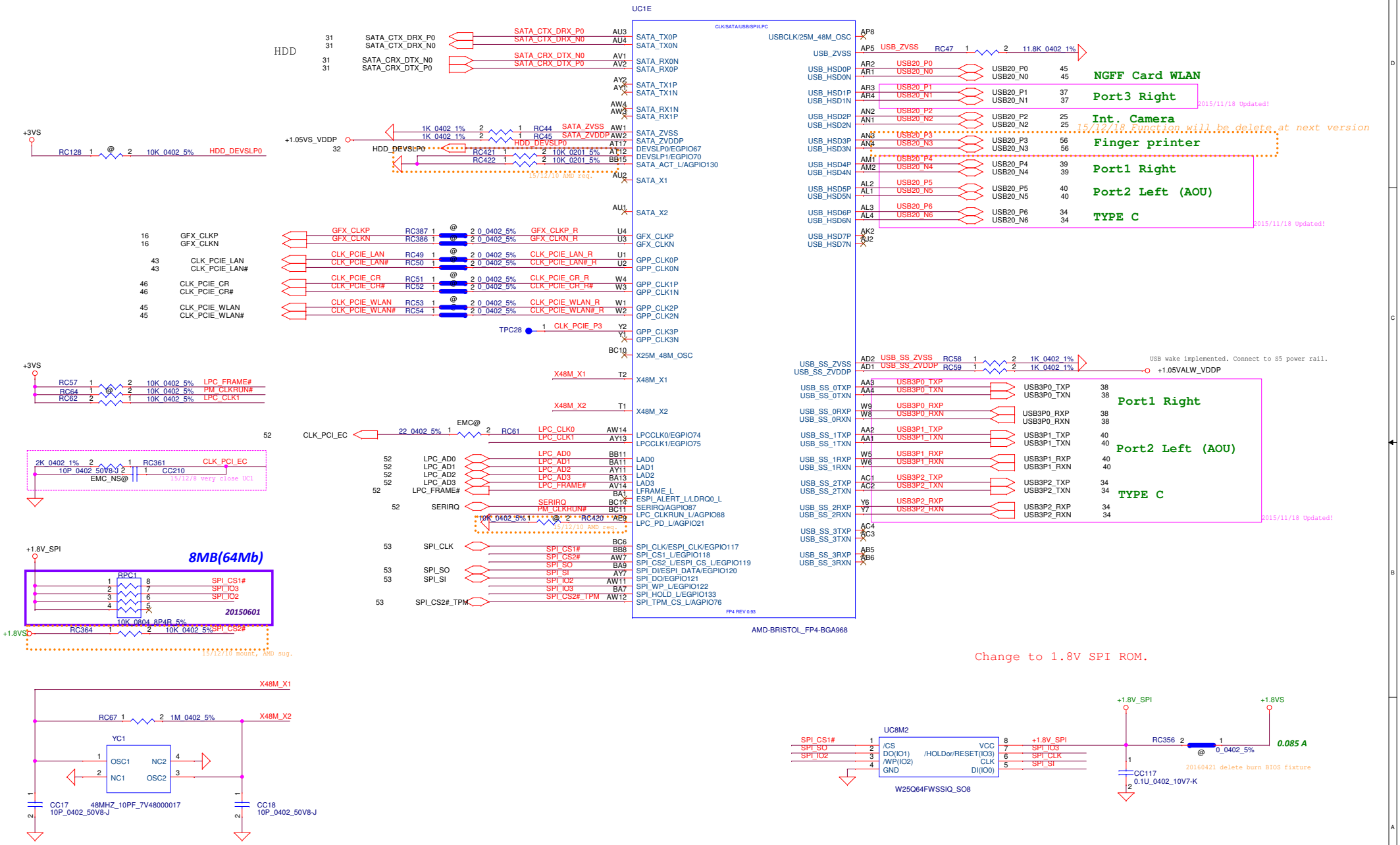

Security Classification	LC Future Center Secret Data		
Issued Date	2015/10/5	Deciphered Date	2014/07/01

THIS SHEET OF ENGINEERING DRAWING IS THE PROPRIETARY PROPERTY OF LC FUTURE CENTER, AND CONTAINS CONFIDENTIAL AND TRADE SECRET INFORMATION. THIS SHEET MAY NOT BE TRANSFERED FROM THE CUSTODY OF THE COMPETENT DIVISION OF R&D DEPARTMENT EXCEPT AS AUTHORIZED BY LC FUTURE CENTER NEITHER THIS SHEET NOR THE INFORMATION IT CONTAINS MAY BE USED BY OR DISCLOSED TO ANY THIRD PARTY WITHOUT PRIOR WRITTEN CONSENT OF LC FUTURE CENTER.

Title: **APU SATA/USB/LPC/SPI**

Size: Custom | Document Number: NM-A861 | Rev: 1.0

Date: Monday, August 01, 2016 | Sheet 9 of 80

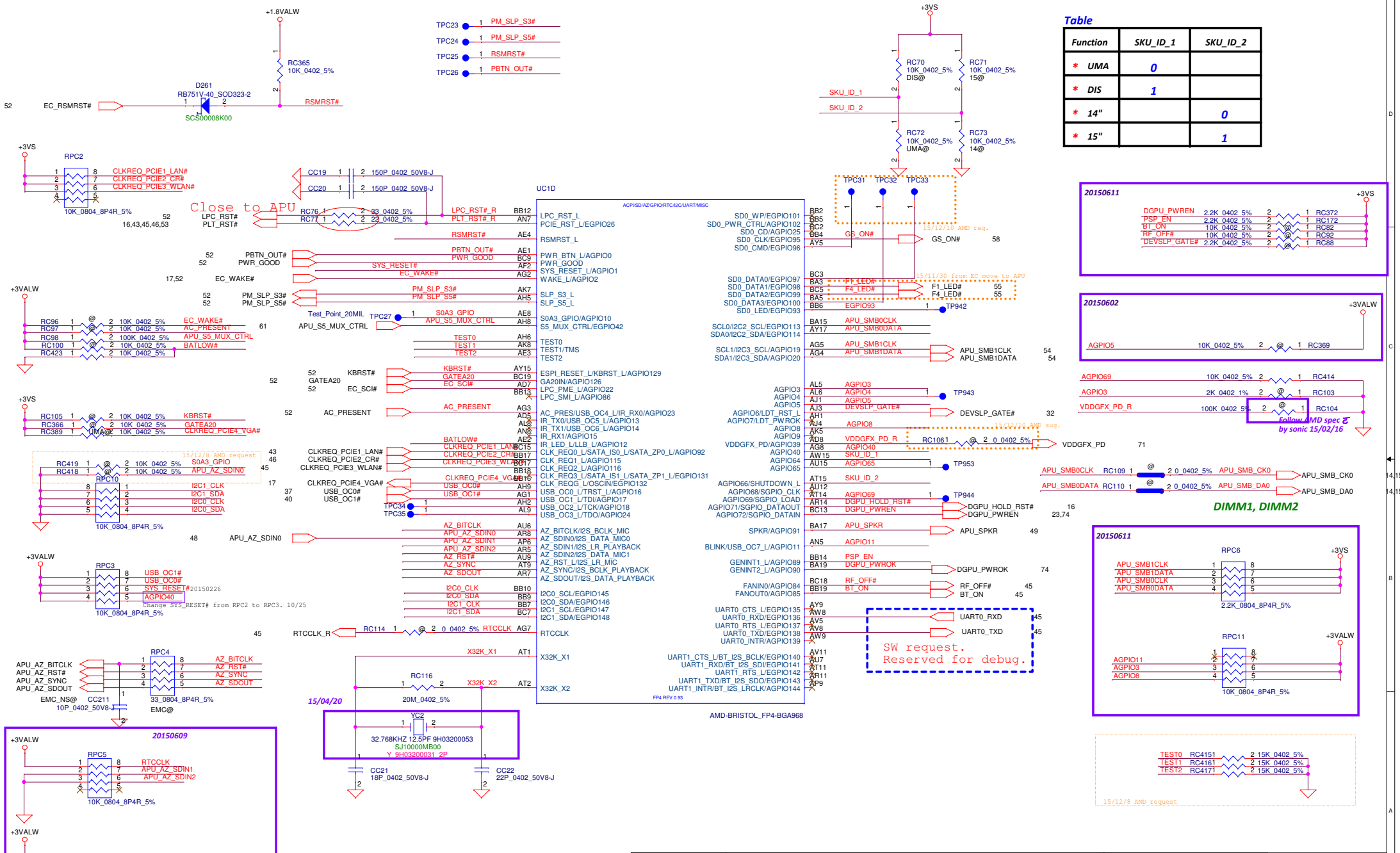

Table

Function	SKU_ID_1	SKU_ID_2
* UMA	0	
* DIS	1	
* 14"		0
* 15"		1

Security Classification	LC Future Center Secret Data		
Issued Date	2015/10/5	Deciphered Date	2014/07/01

THIS SHEET OF ENGINEERING DRAWING IS THE PROPRIETARY PROPERTY OF LC FUTURE CENTER, AND CONTAINS CONFIDENTIAL AND TRADE SECRET INFORMATION. THIS SHEET MAY NOT BE TRANSFERED FROM THE CUSTODY OF THE COMPETENT DIVISION OF R&D DEPARTMENT EXCEPT AS AUTHORIZED BY LC FUTURE CENTER NEITHER THIS SHEET NOR THE INFORMATION IT CONTAINS MAY BE USED BY OR DISCLOSED TO ANY THIRD PARTY WITHOUT PRIOR WRITTEN CONSENT OF LC FUTURE CENTER.

Title: APU GPIO/AZ/I2C/SD/UARTS/A

Size: Custom | Document Number: NM-A861 | Rev: 1.0

Date: Monday, August 01, 2016 | Sheet 10 of 80

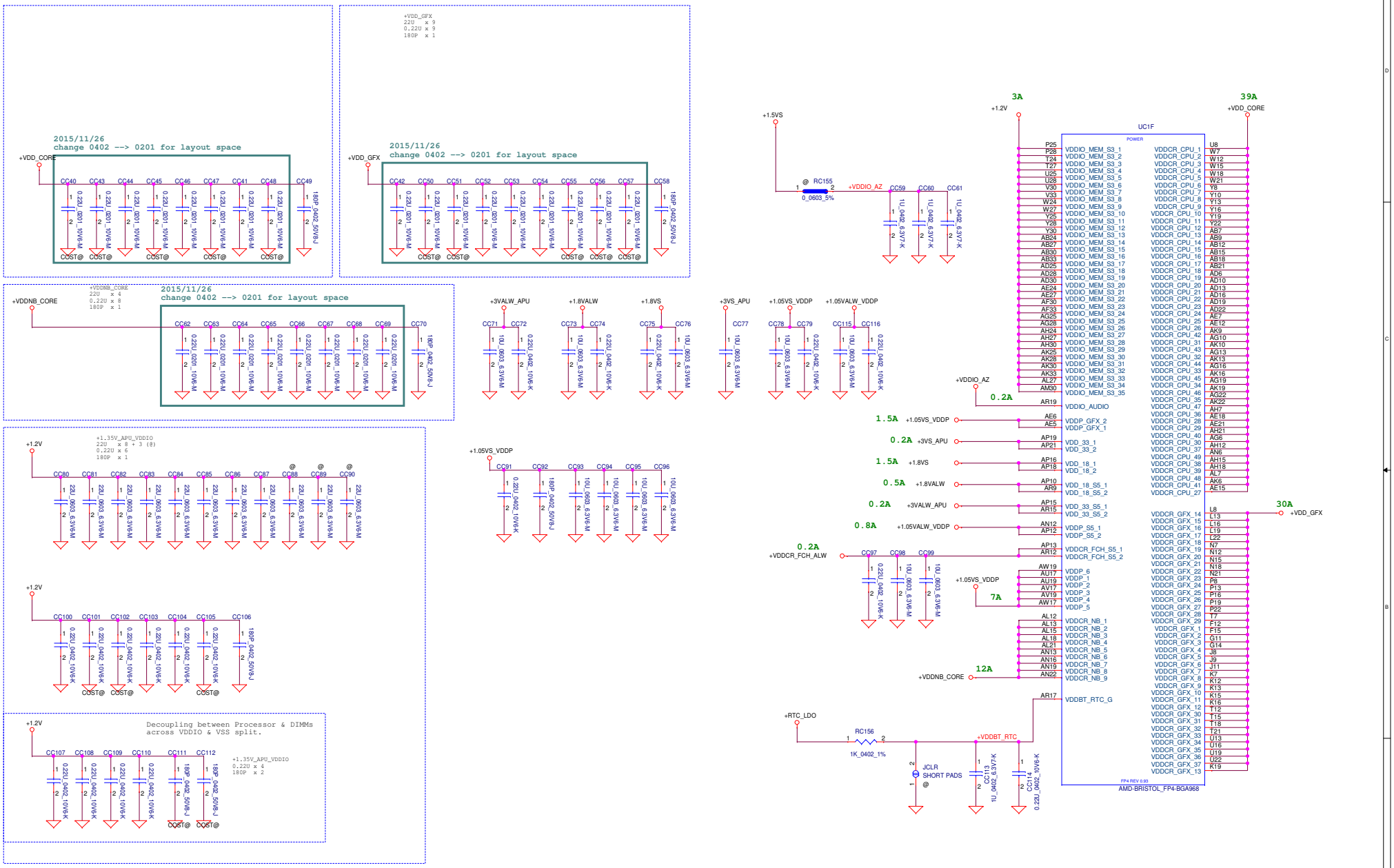

Security Classification	LC Future Center Secret Data		
Issued Date	2015/10/5	Deciphered Date	2014/07/01

THIS SHEET OF ENGINEERING DRAWING IS THE PROPRIETARY PROPERTY OF LC FUTURE CENTER. AND CONTAINS CONFIDENTIAL AND TRADE SECRET INFORMATION. THIS SHEET MAY NOT BE TRANSFERED FROM THE CUSTODY OF THE COMPETENT DIVISION OF R&D DEPARTMENT EXCEPT AS AUTHORIZED BY LC FUTURE CENTER NEITHER THIS SHEET NOR THE INFORMATION IT CONTAINS MAY BE USED BY OR DISCLOSED TO ANY THIRD PARTY WITHOUT PRIOR WRITTEN CONSENT OF LC FUTURE CENTER.

Title: **APU Power**

Size: C | Document Number: NM-A861 | Rev: 1.0

Date: Monday, August 01, 2016 | Sheet 11 of 80

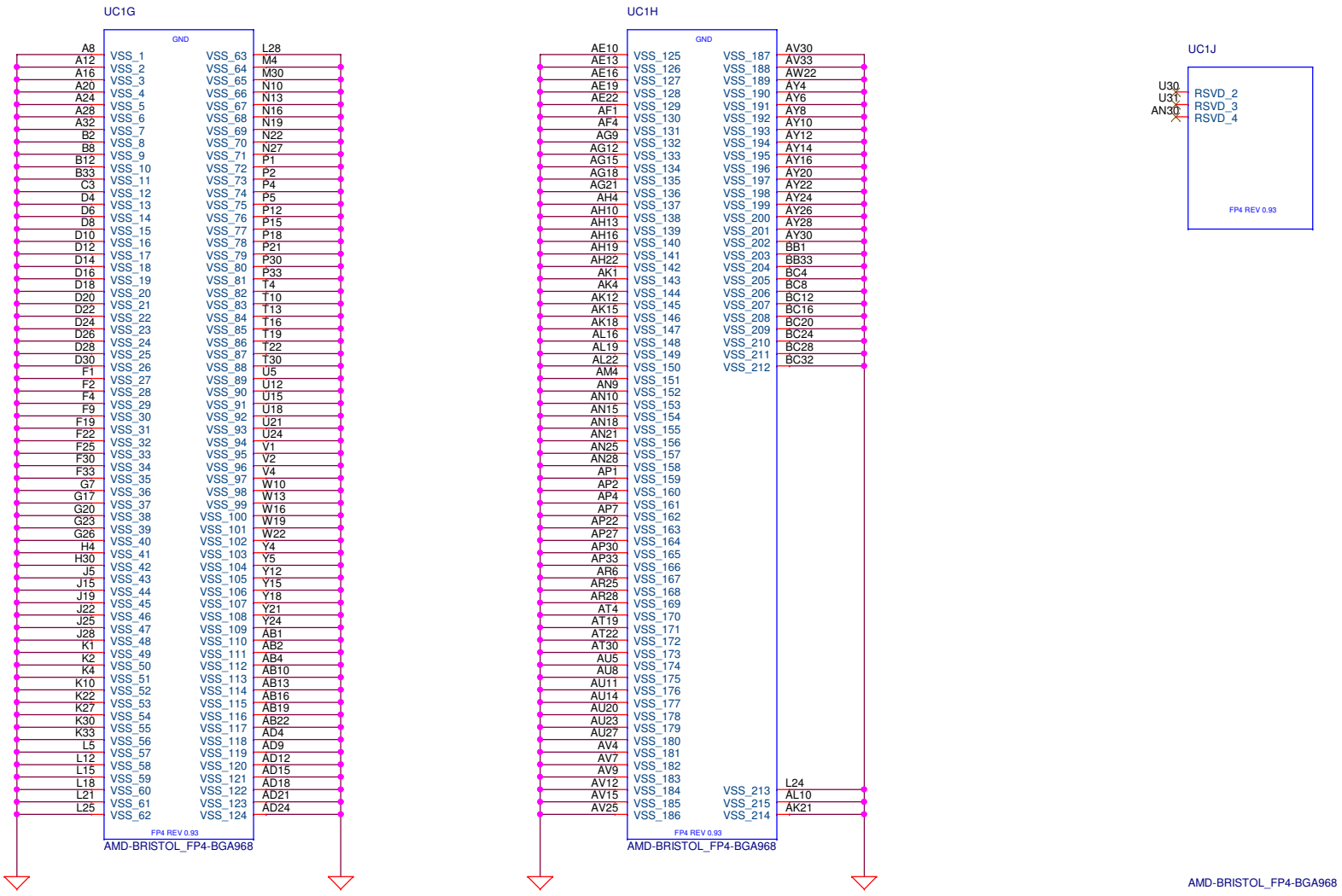

Security Classification	LC Future Center Secret Data		
Issued Date	2015/10/5	Deciphered Date	2014/07/01

THIS SHEET OF ENGINEERING DRAWING IS THE PROPRIETARY PROPERTY OF LC FUTURE CENTER. AND CONTAINS CONFIDENTIAL AND TRADE SECRET INFORMATION. THIS SHEET MAY NOT BE TRANSFERED FROM THE CUSTODY OF THE COMPETENT DIVISION OF R&D DEPARTMENT EXCEPT AS AUTHORIZED BY LC FUTURE CENTER NEITHER THIS SHEET NOR THE INFORMATION IT CONTAINS MAY BE USED BY OR DISCLOSED TO ANY THIRD PARTY WITHOUT PRIOR WRITTEN CONSENT OF LC FUTURE CENTER.

Title: **APU GND**

Size: B | Document Number: NM-A861 | Rev: 1.0

Date: Monday, August 01, 2016 | Sheet 12 of 80

Security Classification	LC Future Center Secret Data		
Issued Date	2015/10/5	Deciphered Date	2014/09/07

THIS SHEET OF ENGINEERING DRAWING IS THE PROPRIETARY PROPERTY OF LC FUTURE CENTER. AND CONTAINS CONFIDENTIAL AND TRADE SECRET INFORMATION. THIS SHEET MAY NOT BE TRANSFERED FROM THE CUSTODY OF THE COMPETENT DIVISION OF R&D DEPARTMENT EXCEPT AS AUTHORIZED BY LC FUTURE CENTER NEITHER THIS SHEET NOR THE INFORMATION IT CONTAINS MAY BE USED BY OR DISCLOSED TO ANY THIRD PARTY WITHOUT PRIOR WRITTEN CONSENT OF LC FUTURE CENTER.

Title	XXXX	
Size B	Document Number	Rev 1.0
	NM-A861	
Date:	Monday, August 01, 2016	Sheet 13 of 80

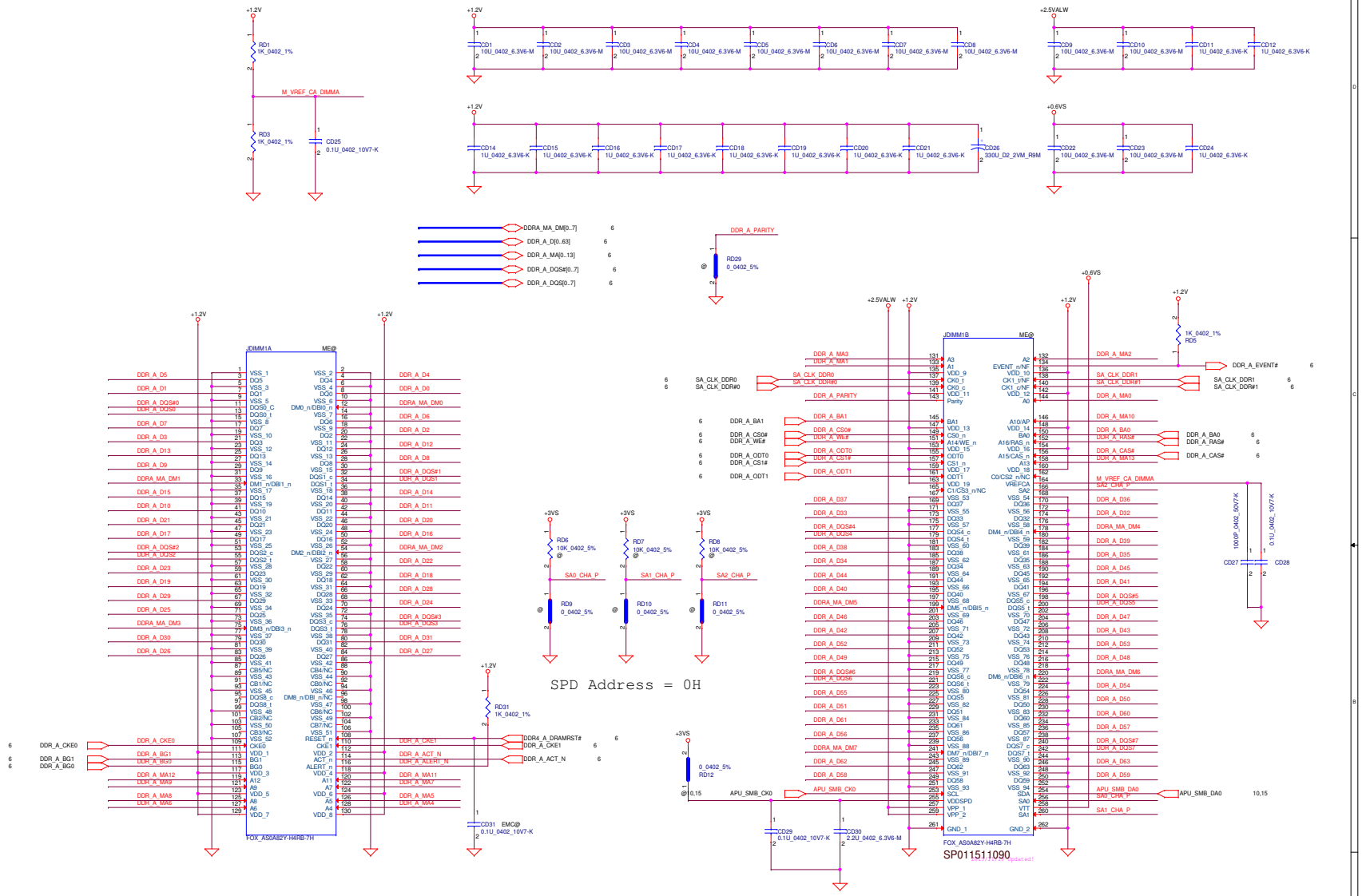

Security Classification	LC Future Center Secret Data		
Issued Date	2015/10/5	Deciphered Date	2016/12/31

THIS SHEET OF ENGINEERING DRAWING IS THE PROPRIETARY PROPERTY OF LC FUTURE CENTER, AND CONTAINS CONFIDENTIAL AND TRADE SECRET INFORMATION. THIS SHEET MAY NOT BE TRANSFERED FROM THE CUSTODY OF THE COMPETENT DIVISION OF R&D DEPARTMENT EXCEPT AS AUTHORIZED BY LC FUTURE CENTER NEITHER THIS SHEET NOR THE INFORMATION IT CONTAINS MAY BE USED BY OR DISCLOSED TO ANY THIRD PARTY WITHOUT PRIOR WRITTEN CONSENT OF LC FUTURE CENTER.

Title: **DDR4 CH-A PRIMARY**

LCFC

Size	Document Number	Rev
Custom	NM-A861	1.0

Date: Monday, August 01, 2016 Sheet 14 of 80

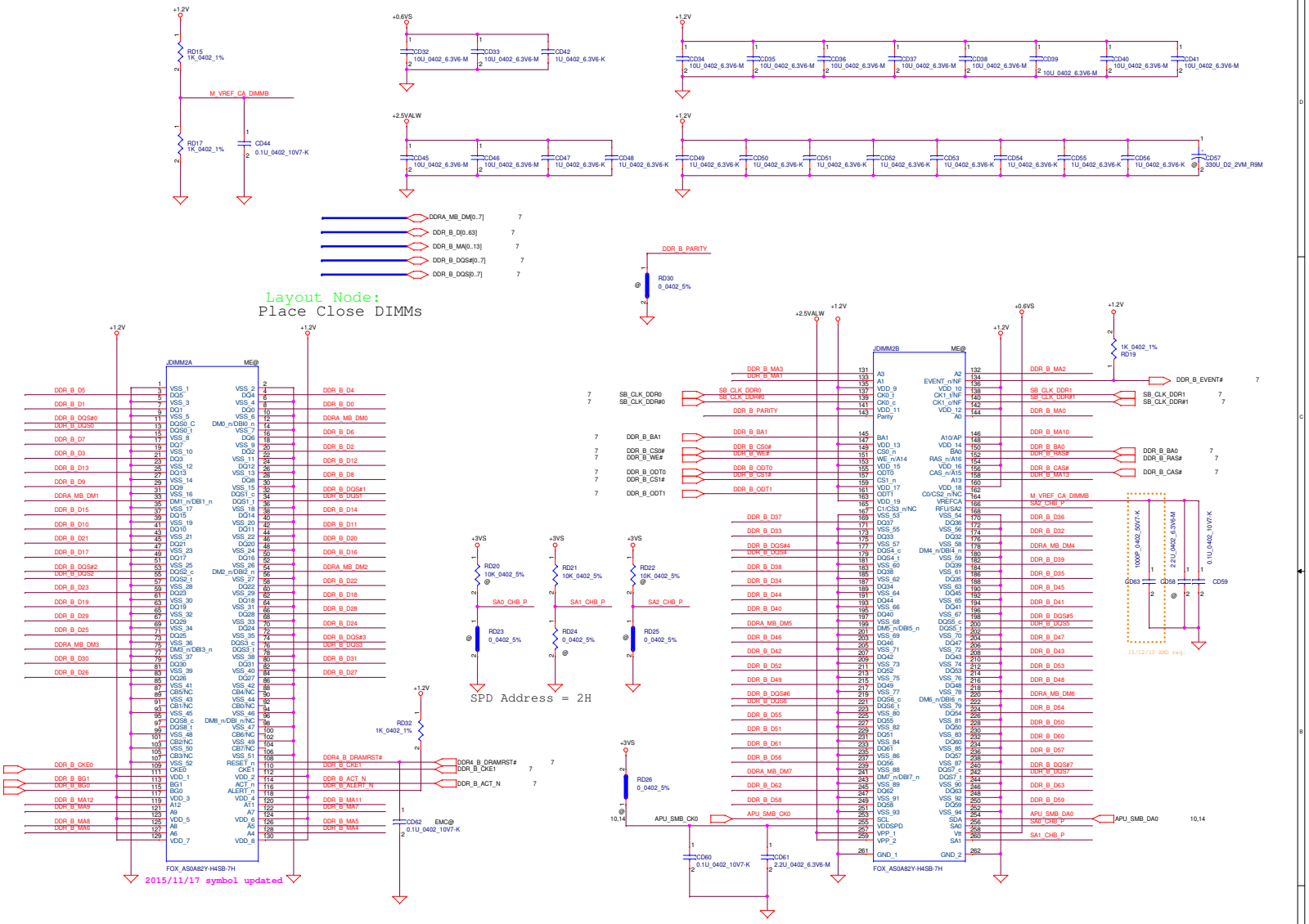

Security Classification	LC Future Center Secret Data		
Issued Date	2015/10/5	Deciphered Date	2016/12/31

THIS SHEET OF ENGINEERING DRAWING IS THE PROPRIETARY PROPERTY OF LC FUTURE CENTER, AND CONTAINS CONFIDENTIAL AND TRADE SECRET INFORMATION. THIS SHEET MAY NOT BE TRANSFERED FROM THE CUSTODY OF THE COMPETENT DIVISION OF R&D DEPARTMENT EXCEPT AS AUTHORIZED BY LC FUTURE CENTER NEITHER THIS SHEET NOR THE INFORMATION IT CONTAINS MAY BE USED BY OR DISCLOSED TO ANY THIRD PARTY WITHOUT PRIOR WRITTEN CONSENT OF LC FUTURE CENTER.

Title: **DDR4 CH-B PRIMARY**

Size: Custom | Document Number: NW-A801 | Rev: 1.0

Date: Monday, August 01, 2016 | Sheet 15 of 80

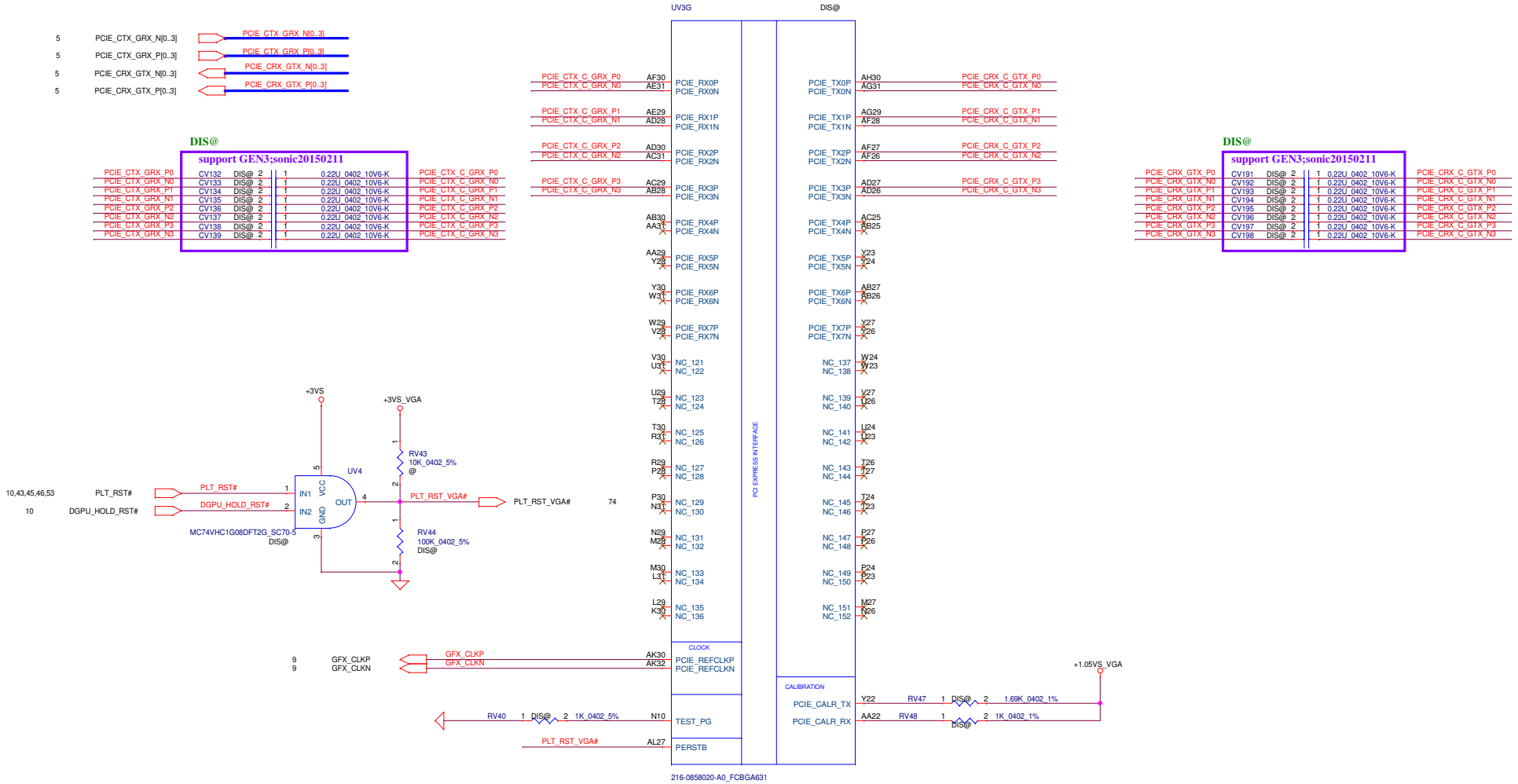

Security Classification	LC Future Center Secret Data		
Issued Date	2015/10/5	Deciphered Date	2014/09/07

THIS SHEET OF ENGINEERING DRAWING IS THE PROPRIETARY PROPERTY OF LC FUTURE CENTER, AND CONTAINS CONFIDENTIAL AND TRADE SECRET INFORMATION. THIS SHEET MAY NOT BE TRANSFERED FROM THE CUSTODY OF THE COMPETENT DIVISION OF R&D DEPARTMENT EXCEPT AS AUTHORIZED BY LC FUTURE CENTER NEITHER THIS SHEET NOR THE INFORMATION IT CONTAINS MAY BE USED BY OR DISCLOSED TO ANY THIRD PARTY WITHOUT PRIOR WRITTEN CONSENT OF LC FUTURE CENTER.

Title: Topaz & Jet PCIE

Size: Custom | Document Number: NM-A861 | Rev: 1.0

Date: Monday, August 01, 2016 | Sheet 16 of 80

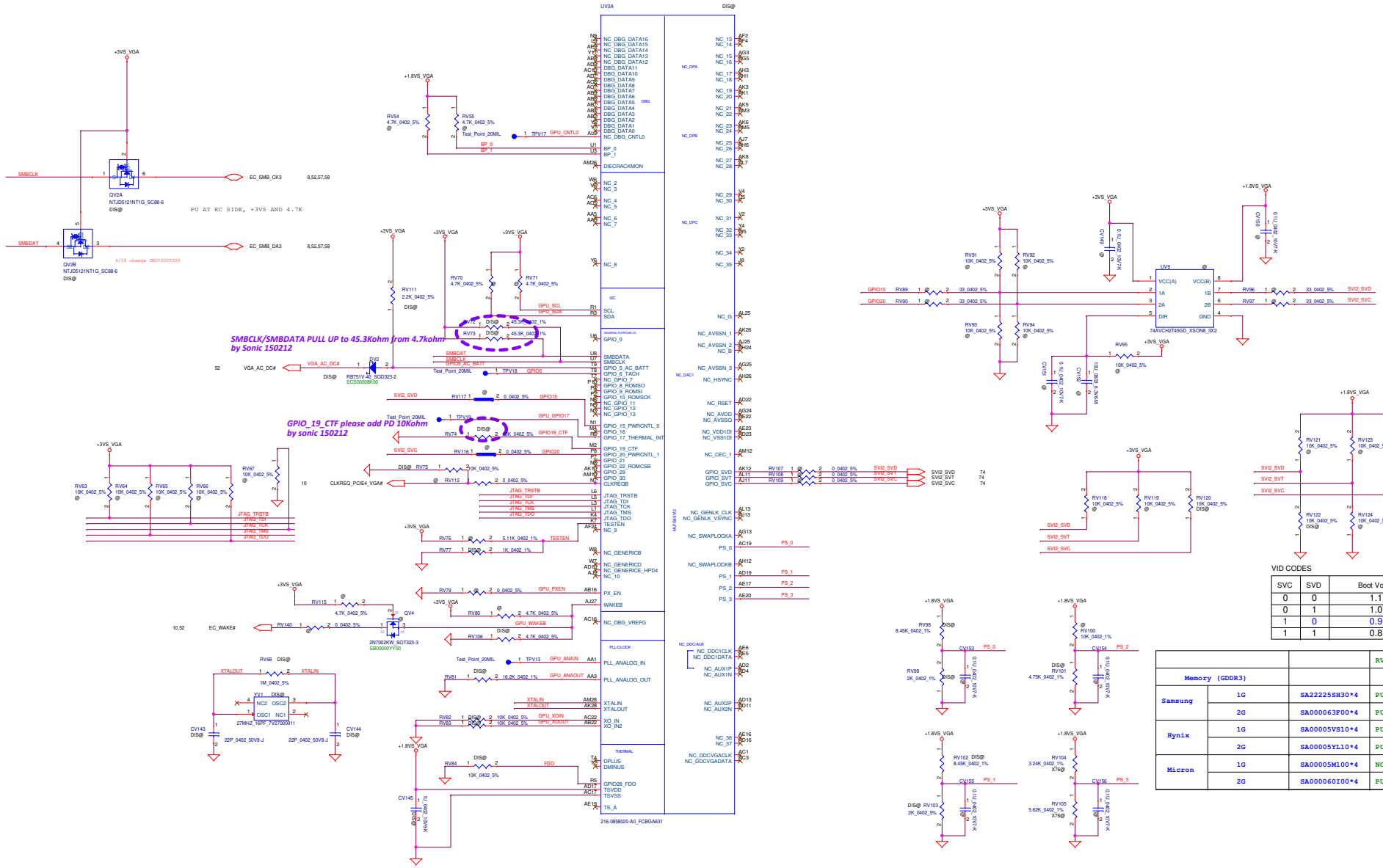

SVC	SVD	Boot Voltage
0	0	1.1V
0	1	1.0V
1	0	0.9V(Default)
1	1	0.8V

		RV104	RV105
Memory (GDDR3)			
Samsung	1G	SA22225SH30*4	PU 8.45K	PD 2K
	2G	SA000063F00*4	PU 3.4K	PD 10K
Hynix	1G	SA00005VS10*4	PU 4.53K	PD 2K
	2G	SA00005YL10*4	PU 4.75K	NC
Micron	1G	SA00005M100*4	NC	PD 4.75K
	2G	SA000060I00*4	PU 3.24K	PD 5.62K

Security Classification	LC Future Center Secret Data		
Issued Date	2015/10/5	Deciphered Date	2014/09/07

THIS SHEET OF ENGINEERING DRAWING IS THE PROPRIETARY PROPERTY OF LC FUTURE CENTER, AND CONTAINS CONFIDENTIAL AND TRADE SECRET INFORMATION. THIS SHEET MAY NOT BE TRANSFERED FROM THE CUSTODY OF THE COMPETENT DIVISION OF R&D DEPARTMENT EXCEPT AS AUTHORIZED BY LC FUTURE CENTER NEITHER THIS SHEET NOR THE INFORMATION IT CONTAINS MAY BE USED BY OR DISCLOSED TO ANY THIRD PARTY WITHOUT PRIOR WRITTEN CONSENT OF LC FUTURE CENTER.

Title: Topaz & Jet GPIO

Size: Custom | Document Number: NM-A861 | Rev: 1.0

Date: Monday, August 01, 2016 | Sheet 17 of 80

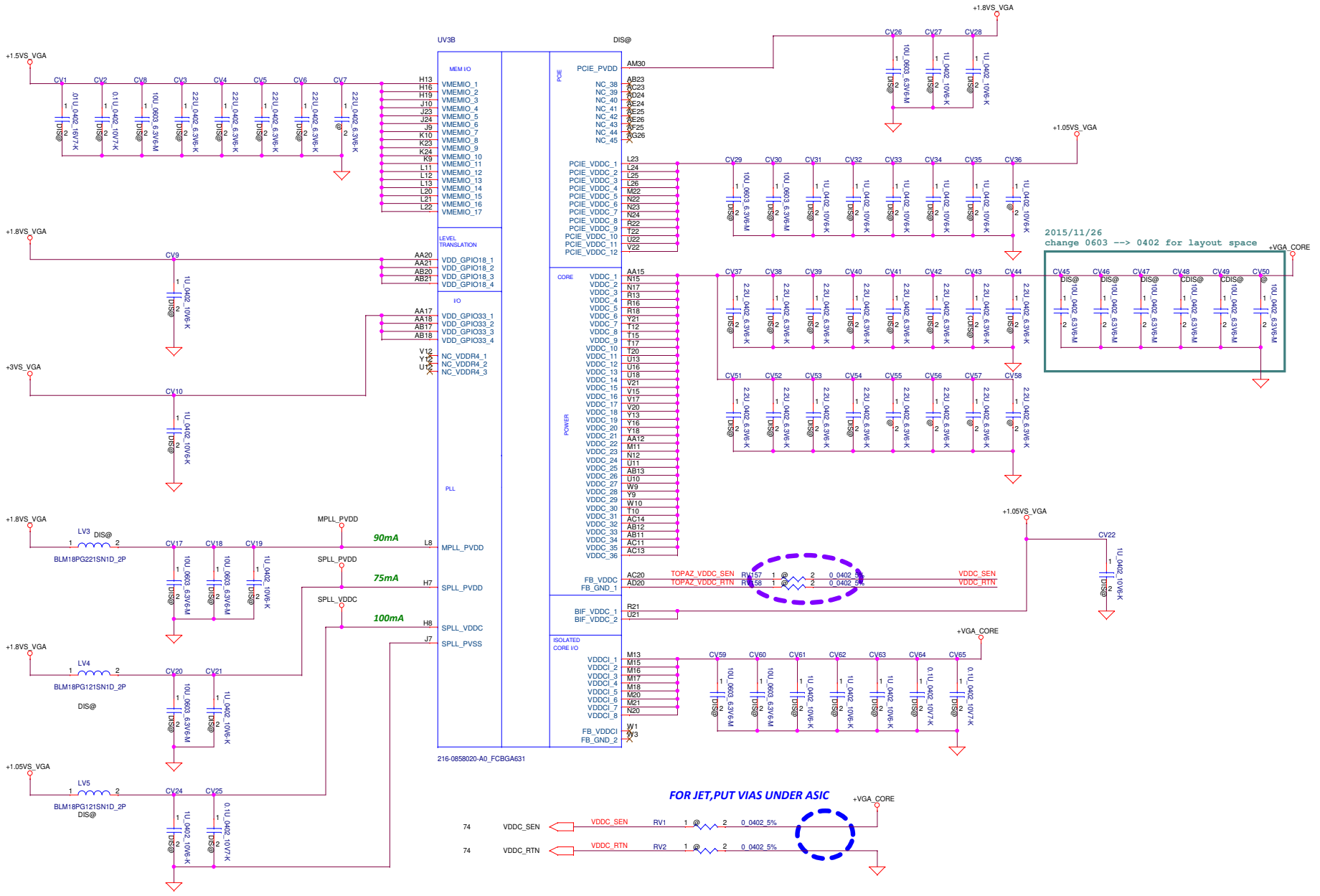

Security Classification	LC Future Center Secret Data		
Issued Date	2015/10/5	Deciphered Date	2014/09/07

THIS SHEET OF ENGINEERING DRAWING IS THE PROPRIETARY PROPERTY OF LC FUTURE CENTER, AND CONTAINS CONFIDENTIAL AND TRADE SECRET INFORMATION. THIS SHEET MAY NOT BE TRANSFERED FROM THE CUSTODY OF THE COMPETENT DIVISION OF R&D DEPARTMENT EXCEPT AS AUTHORIZED BY LC FUTURE CENTER NEITHER THIS SHEET NOR THE INFORMATION IT CONTAINS MAY BE USED BY OR DISCLOSED TO ANY THIRD PARTY WITHOUT PRIOR WRITTEN CONSENT OF LC FUTURE CENTER.

Title: *Topaz & Jet Core Power*

Size: Custom | Document Number: NM-A861 | Rev: 1.0

Date: Monday, August 01, 2016 | Sheet 18 of 80

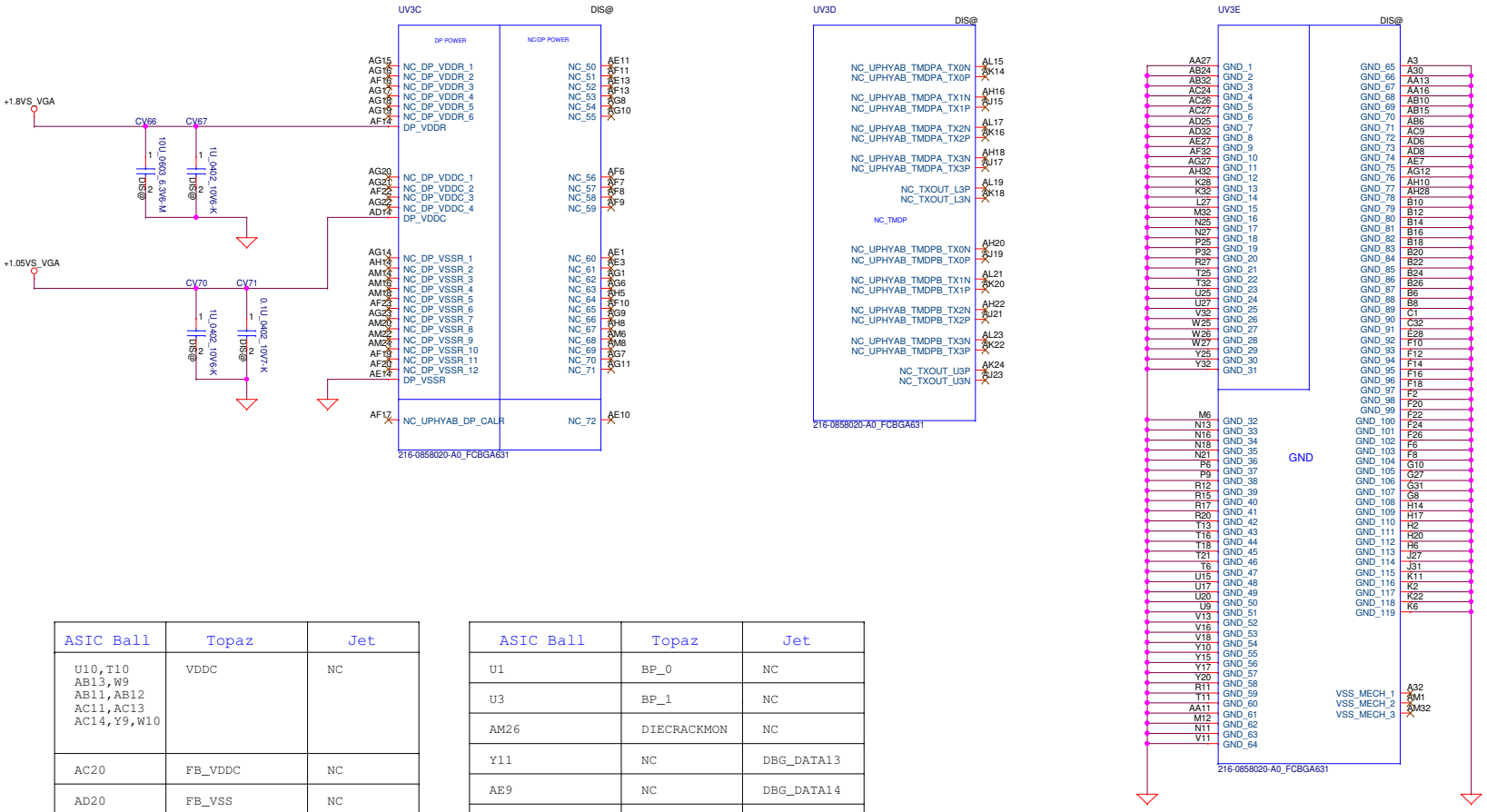

ASIC Ball	Topaz	Jet
U10,T10 AB13,W9 AB11,AB12 AC11,AC13 AC14,Y9,W10	VDDC	NC
AC20	FB_VDDC	NC
AD20	FB_VSS	NC
W1	FB_VDDCI	NC
W3	FB_VSS	NC
AJ11	GPIO_SVC	NC_SVI2
AK12	GPIO_SVD	NC_SVI2
AL11	GPIO_SVT	NC_SVI2
N6	GPIO_11	NC_GPIO11
N5	GPIO_12	NC_GPIO12
N3	GPIO_13	NC_GPIO13
AJ27	WAKEB	NC_VSYNC
T8	PCC/GPIO_6	GPIO_6
AA3	PLL_ANALOG_OUT	NC
AA1	PLL_ANALOG_IN	NC

ASIC Ball	Topaz	Jet
U1	BP_0	NC
U3	BP_1	NC
AM26	DIECRACKMON	NC
Y11	NC	DBG_DATA13
AE9	NC	DBG_DATA14
L9	NC	DBG_DATA15
N9	NC	DBG_DATA16
AE8	NC	DBG_DATA12
AL9	NC	DBG_CNTL0
H13,H16,H19,J10 J23,J24,J9,K10 K23,K24,K9,L11 L12,L13,L20,L21 L22	VMEMIO	VDDR1
AA17,AA18 AB17,AB18	VDD_GPIO33	VDDR3
AA20,AA21 AB20,AB21	VDD_GPIO18	VDD_CT

	Bits5	Bits4	Bits3	Bits2	Bits1
PS0	1	1	0	0	1
PS1	0	0	1	1	1
PS2	0	0	0	0	0
PS3	1	1	?	?	?

Security Classification	LC Future Center Secret Data			Title
Issued Date	2015/10/5	Deciphered Date	2014/09/07	Topaz & Jet DP Power/GND

THIS SHEET OF ENGINEERING DRAWING IS THE PROPRIETARY PROPERTY OF LC FUTURE CENTER, AND CONTAINS CONFIDENTIAL AND TRADE SECRET INFORMATION. THIS SHEET MAY NOT BE TRANSFERED FROM THE CUSTODY OF THE COMPETENT DIVISION OF R&D DEPARTMENT EXCEPT AS AUTHORIZED BY LC FUTURE CENTER NEITHER THIS SHEET NOR THE INFORMATION IT CONTAINS MAY BE USED BY OR DISCLOSED TO ANY THIRD PARTY WITHOUT PRIOR WRITTEN CONSENT OF LC FUTURE CENTER.

Size	Document Number	Rev
Custom	NM-A861	1.0

Date: Monday, August 01, 2016 Sheet 19 of 80

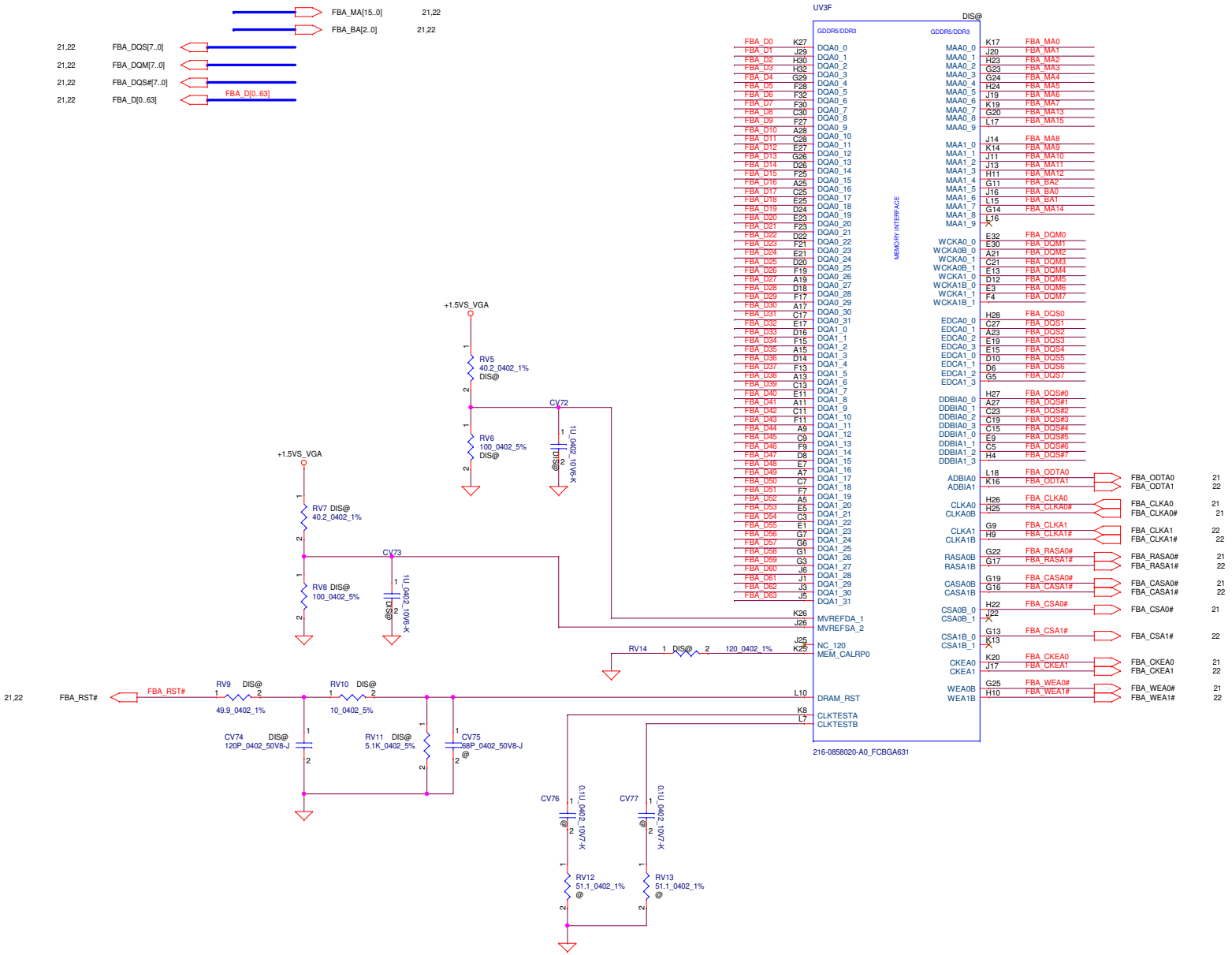

Security Classification	LC Future Center Secret Data		
Issued Date	2015/10/5	Deciphered Date	2014/09/07

THIS SHEET OF ENGINEERING DRAWING IS THE PROPRIETARY PROPERTY OF LC FUTURE CENTER, AND CONTAINS CONFIDENTIAL AND TRADE SECRET INFORMATION. THIS SHEET MAY NOT BE TRANSFERED FROM THE CUSTODY OF THE COMPETENT DIVISION OF R&D DEPARTMENT EXCEPT AS AUTHORIZED BY LC FUTURE CENTER NEITHER THIS SHEET NOR THE INFORMATION IT CONTAINS MAY BE USED BY OR DISCLOSED TO ANY THIRD PARTY WITHOUT PRIOR WRITTEN CONSENT OF LC FUTURE CENTER.

Title: *Topaz & Jet MEM Interface*

Size: Custom | Document Number: NM-A861 | Rev: 1.0

Date: Monday, August 01, 2016 | Sheet 20 of 80

Memory Partition A - Lower 32 bits

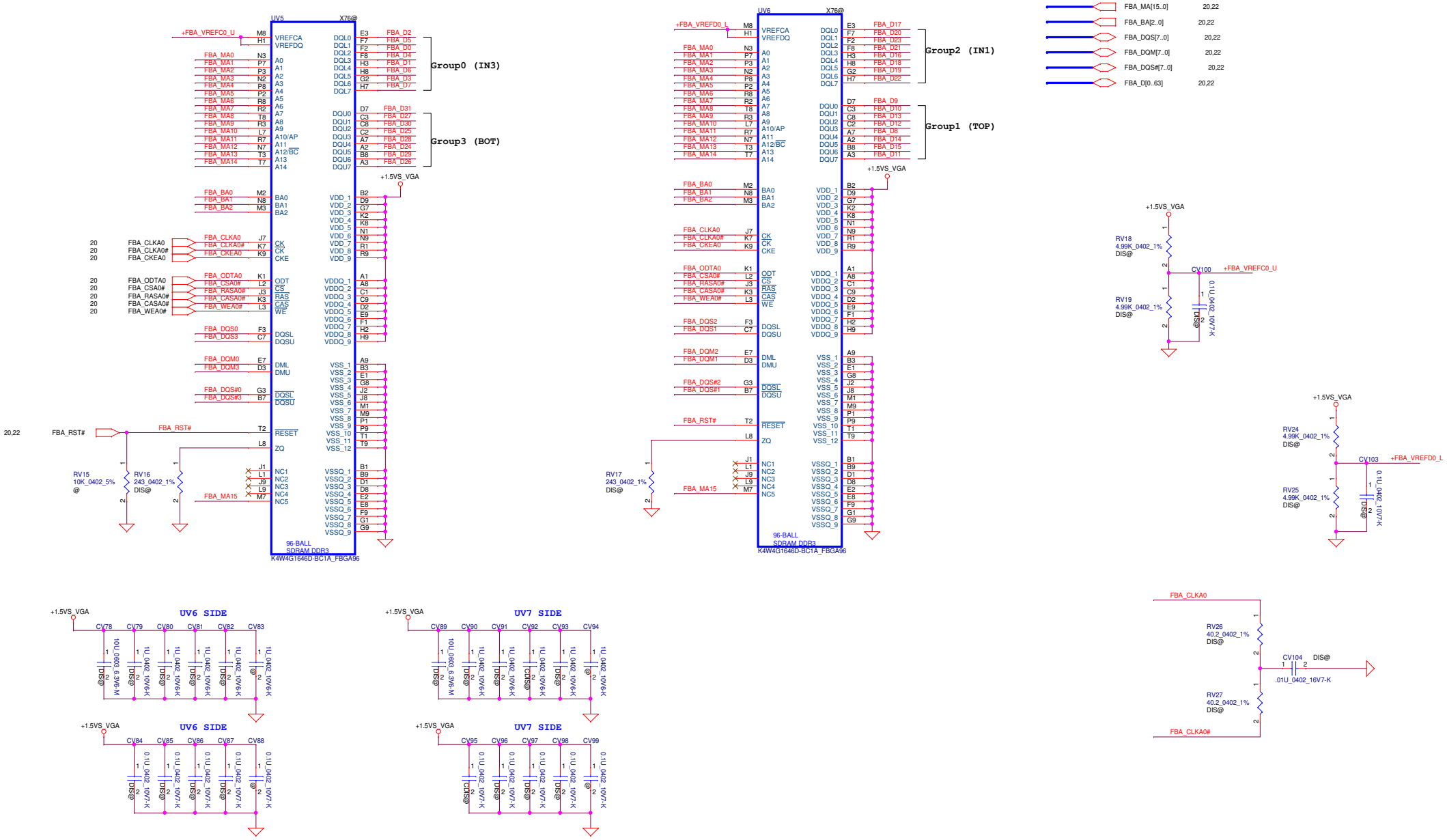

Security Classification	LC Future Center Secret Data		
Issued Date	2015/10/5	Deciphered Date	2014/09/07

THIS SHEET OF ENGINEERING DRAWING IS THE PROPRIETARY PROPERTY OF LC FUTURE CENTER, AND CONTAINS CONFIDENTIAL AND TRADE SECRET INFORMATION. THIS SHEET MAY NOT BE TRANSFERED FROM THE CUSTODY OF THE COMPETENT DIVISION OF R&D DEPARTMENT EXCEPT AS AUTHORIZED BY LC FUTURE CENTER NEITHER THIS SHEET NOR THE INFORMATION IT CONTAINS MAY BE USED BY OR DISCLOSED TO ANY THIRD PARTY WITHOUT PRIOR WRITTEN CONSENT OF LC FUTURE CENTER.

Title: Topaz & Jet DDR3 VRAM U

Size: Custom | Document Number: NM-A861 | Rev: 1.0

Date: Monday, August 01, 2016 | Sheet 21 of 80

Memory Partition A - Upper 32 bits

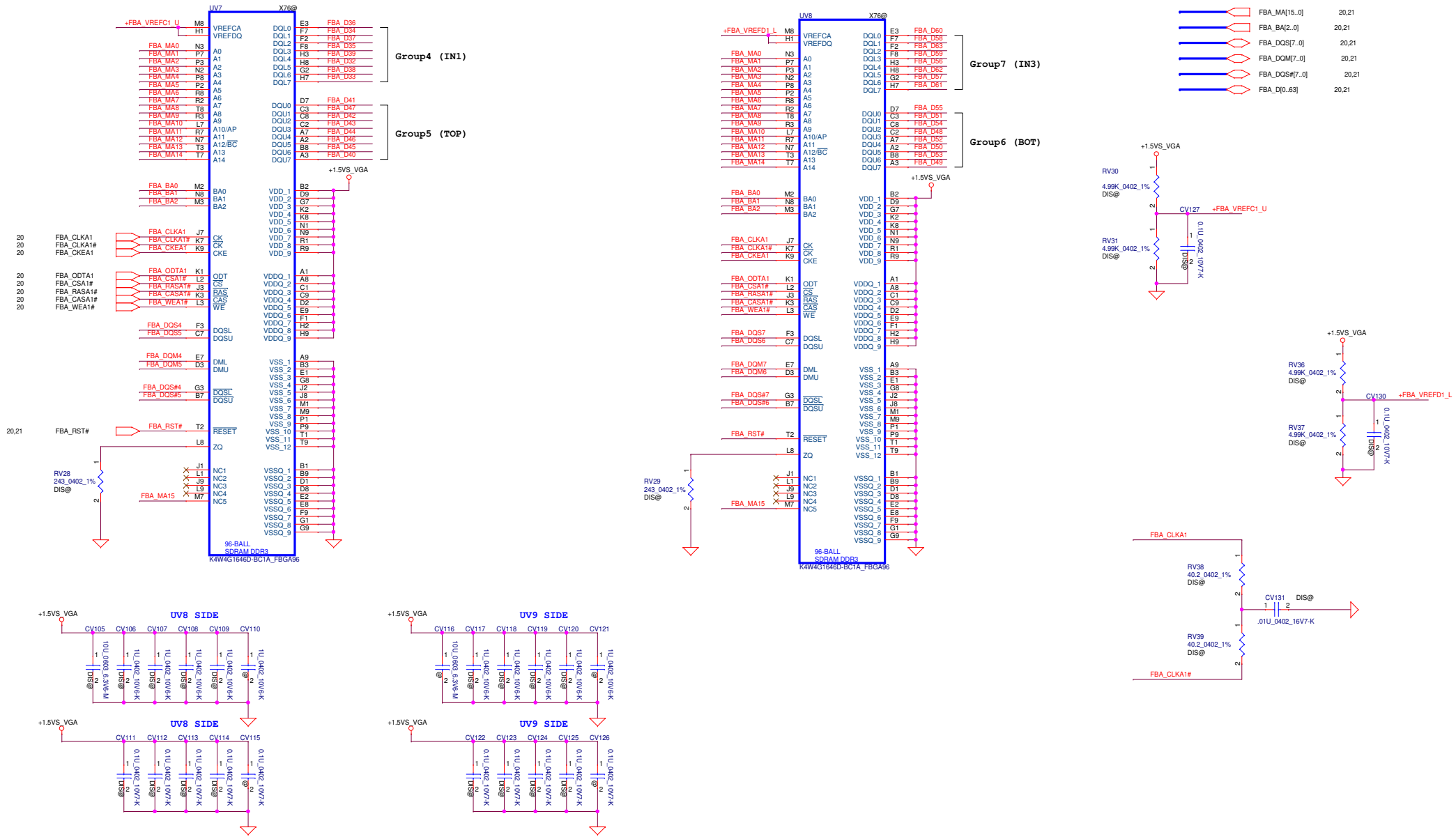

Security Classification	LC Future Center Secret Data		
Issued Date	2015/10/5	Deciphered Date	2014/09/07

THIS SHEET OF ENGINEERING DRAWING IS THE PROPRIETARY PROPERTY OF LC FUTURE CENTER, AND CONTAINS CONFIDENTIAL AND TRADE SECRET INFORMATION. THIS SHEET MAY NOT BE TRANSFERED FROM THE CUSTODY OF THE COMPETENT DIVISION OF R&D DEPARTMENT EXCEPT AS AUTHORIZED BY LC FUTURE CENTER NEITHER THIS SHEET NOR THE INFORMATION IT CONTAINS MAY BE USED BY OR DISCLOSED TO ANY THIRD PARTY WITHOUT PRIOR WRITTEN CONSENT OF LC FUTURE CENTER.

Title: *Topaz & Jet DDR3 VRAM L*

Size: Custom | Document Number: NM-A861 | Rev: 1.0

Date: Monday, August 01, 2016 | Sheet 22 of 80

+1.5VS to +1.5VS_VGA

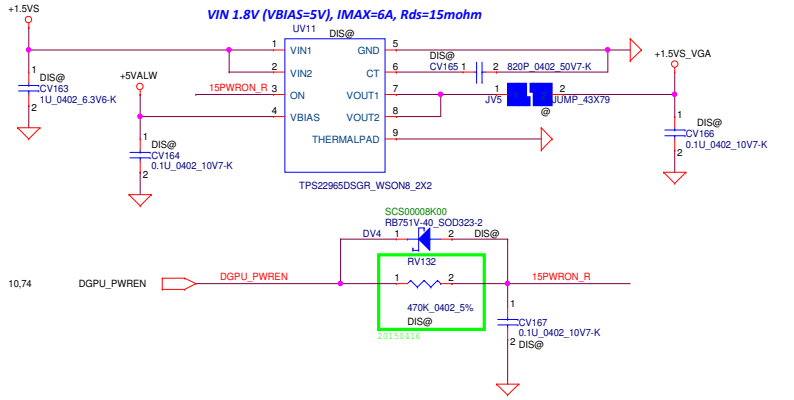

+1.8VS to +1.8VS_VGA

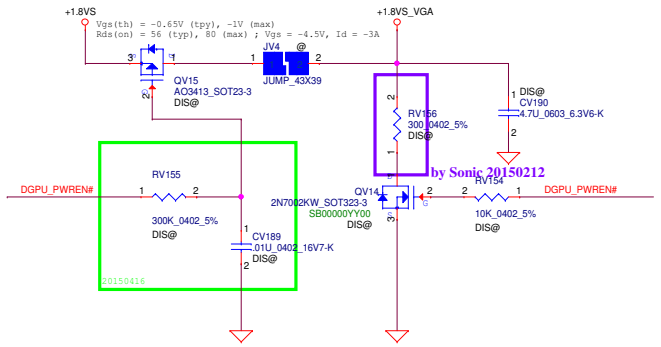

MLPS	Bit				
	5	4	3	2	1
PS_0[5:1]	1	1	0	0	1
PS_1[5:1]	1	1	0	0	0
PS_2[5:1]	1	1	0	0	0
PS_3[5:1]	1	1	X	X	X

+3VS to +3VS_VGA

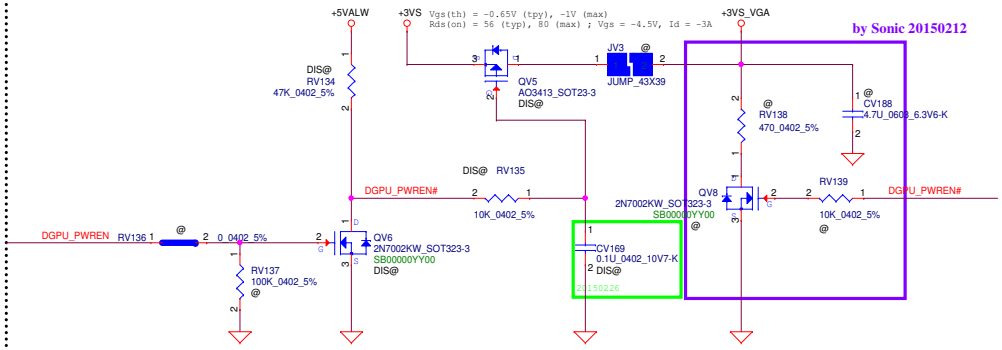

+1.05VS_VDDP to +1.05VS_VGA

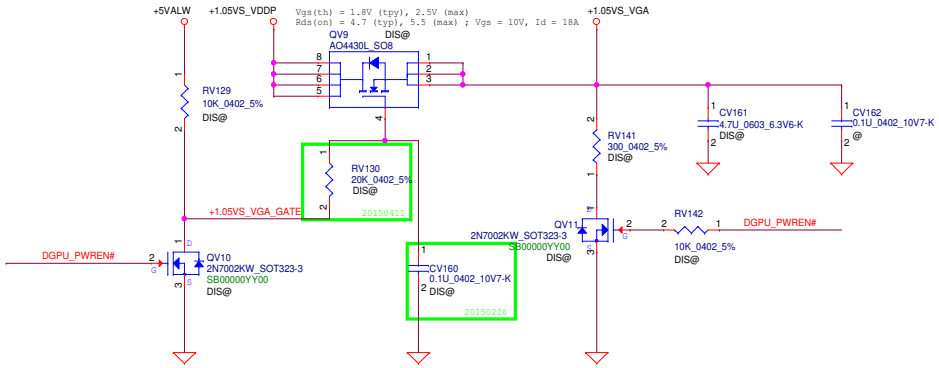

PS_0[1] PS_0[2] PS_0[3]	ROM_CONFIG[0] ROM_CONFIG[1] ROM_CONFIG[2]	STRAP_BIOS_ROM_EN = 1 ROM_CONFIG[2:0] = [001] 256MB
PS_0[4]	N/A	1 (Default)
PS_0[5]	N/A	1 (Default)
PS_1[1]	STRAP_BIF_GEN3_EN_A	0 = PCIe GEN3 is not supported
PS_1[2]	STRAP_BIF_CLK_PM_EN	0 = The CLKREQB power management capability is disabled
PS_1[3]	N/A	0 (Default)
PS_1[4]	STRAP_TX_CFG_DRV_FULL_SWING	1 = The transmitter full-swing is enabled
PS_1[5]	STRAP_TX_DEEMPH_EN	1 = Tx deemphasis enabled
PS_2[1]	N/A	0 (Default)
PS_2[2]	N/A	0 (Default)
PS_2[3]	STRAP_BIOS_ROM_EN	0 = Disable the external BIOS ROM device
PS_2[4]	N/A	1 (Default)
PS_2[5]	N/A	1 (Default)
PS_3[1] PS_3[2] PS_3[3]	BOARD_CONFIG[0] BOARD_CONFIG[1] BOARD_CONFIG[2]	PS_3[3..1] 101 = Micron 2G 110 = Samsung 2G 111 = Hynix 2G
PS_3[4]	N/A	1 (Default)
PS_3[5]	N/A	1 (Default)

Security Classification	LC Future Center Secret Data		
Issued Date	2015/10/5	Deciphered Date	2014/09/07

THIS SHEET OF ENGINEERING DRAWING IS THE PROPRIETARY PROPERTY OF LC FUTURE CENTER, AND CONTAINS CONFIDENTIAL AND TRADE SECRET INFORMATION. THIS SHEET MAY NOT BE TRANSFERED FROM THE CUSTODY OF THE COMPETENT DIVISION OF R&D DEPARTMENT EXCEPT AS AUTHORIZED BY LC FUTURE CENTER NEITHER THIS SHEET NOR THE INFORMATION IT CONTAINS MAY BE USED BY OR DISCLOSED TO ANY THIRD PARTY WITHOUT PRIOR WRITTEN CONSENT OF LC FUTURE CENTER.

Title: Topaz & Jet swich power

Size: Custom | Document Number: NM-A861 | Rev: 1.0

Date: Monday, August 01, 2016 | Sheet 23 of 80

BLANK

Security Classification	LC Future Center Secret Data		
Issued Date	2015/10/5	Deciphered Date	2016/12/31

THIS SHEET OF ENGINEERING DRAWING IS THE PROPRIETARY PROPERTY OF LC FUTURE CENTER. AND CONTAINS CONFIDENTIAL AND TRADE SECRET INFORMATION. THIS SHEET MAY NOT BE TRANSFERED FROM THE CUSTODY OF THE COMPETENT DIVISION OF R&D DEPARTMENT EXCEPT AS AUTHORIZED BY LC FUTURE CENTER NEITHER THIS SHEET NOR THE INFORMATION IT CONTAINS MAY BE USED BY OR DISCLOSED TO ANY THIRD PARTY WITHOUT PRIOR WRITTEN CONSENT OF LC FUTURE CENTER.

Title

BLANK

Size	Document Number	Rev
Custom	NM-A861	1.0

Date: Monday, August 01, 2016 | Sheet 24 of 80

LCDVDD Circuit

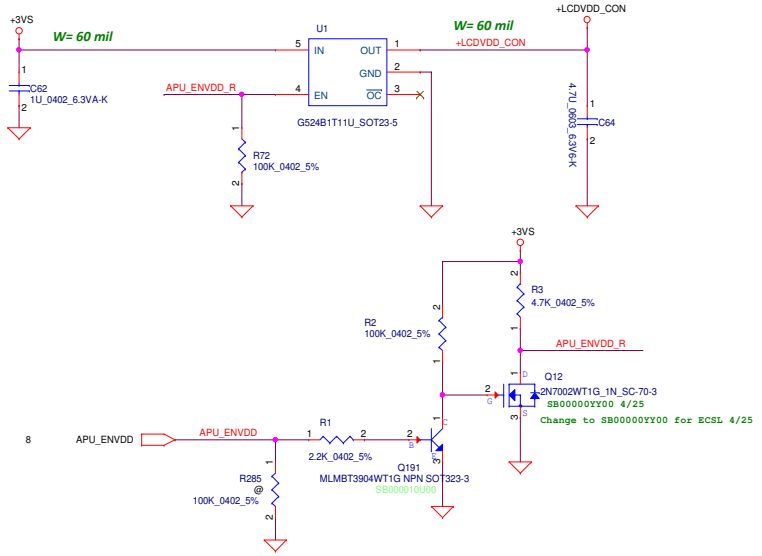

CMOS Camera

eDP CONN.

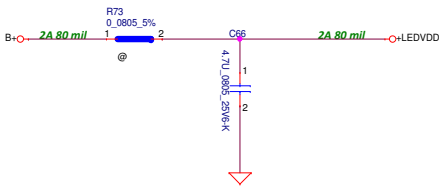

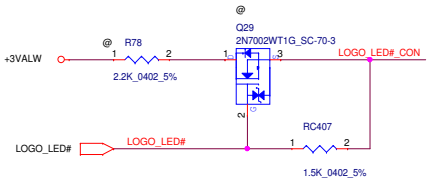

16/02/13 LOGO_LED blink issue.
1. Reserve +3VALW and R79 on JLCD1.32 for logo led.
2. Reserve Q29 and R78.

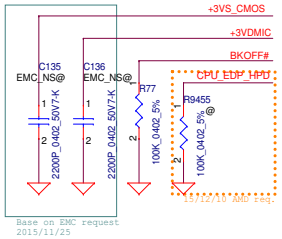

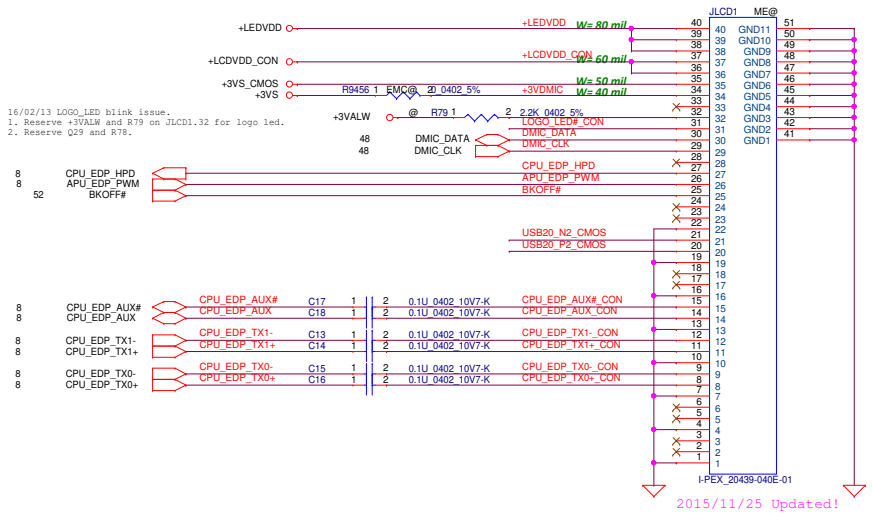

EMC requset. Close to JLCD

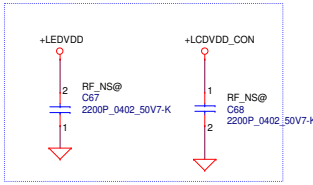

ESD request

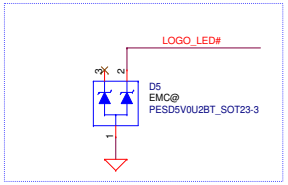

CMOS USB Port 2

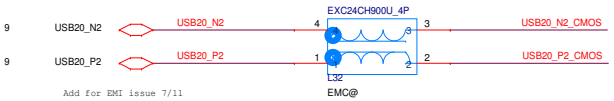

Security Classification	LC Future Center Secret Data		
Issued Date	2015/10/5	Deciphered Date	2016/12/31

THIS SHEET OF ENGINEERING DRAWING IS THE PROPRIETARY PROPERTY OF LC FUTURE CENTER, AND CONTAINS CONFIDENTIAL AND TRADE SECRET INFORMATION. THIS SHEET MAY NOT BE TRANSFERED FROM THE CUSTODY OF THE COMPETENT DIVISION OF R&D DEPARTMENT EXCEPT AS AUTHORIZED BY LC FUTURE CENTER NEITHER THIS SHEET NOR THE INFORMATION IT CONTAINS MAY BE USED BY OR DISCLOSED TO ANY THIRD PARTY WITHOUT PRIOR WRITTEN CONSENT OF LC FUTURE CENTER.

Title: eDP CONN

Size: Custom | Document Number: NM-A861 | Rev: 1.0

Date: Monday, August 01, 2016 | Sheet 25 of 80

Security Classification	LC Future Center Secret Data		
Issued Date	2015/10/5	Deciphered Date	2014/09/07

THIS SHEET OF ENGINEERING DRAWING IS THE PROPRIETARY PROPERTY OF LC FUTURE CENTER, AND CONTAINS CONFIDENTIAL AND TRADE SECRET INFORMATION. THIS SHEET MAY NOT BE TRANSFERED FROM THE CUSTODY OF THE COMPETENT DIVISION OF R&D DEPARTMENT EXCEPT AS AUTHORIZED BY LC FUTURE CENTER NEITHER THIS SHEET NOR THE INFORMATION IT CONTAINS MAY BE USED BY OR DISCLOSED TO ANY THIRD PARTY WITHOUT PRIOR WRITTEN CONSENT OF LC FUTURE CENTER.

Title

XXXX

Size: Custom

Document Number: NW-A861

Rev: 1.0

Date: Monday, August 01, 2016

BLANK

Security Classification	LC Future Center Secret Data		
Issued Date	2015/10/5	Deciphered Date	2014/09/07

THIS SHEET OF ENGINEERING DRAWING IS THE PROPRIETARY PROPERTY OF LC FUTURE CENTER, AND CONTAINS CONFIDENTIAL AND TRADE SECRET INFORMATION. THIS SHEET MAY NOT BE TRANSFERED FROM THE CUSTODY OF THE COMPETENT DIVISION OF R&D DEPARTMENT EXCEPT AS AUTHORIZED BY LC FUTURE CENTER NEITHER THIS SHEET NOR THE INFORMATION IT CONTAINS MAY BE USED BY OR DISCLOSED TO ANY THIRD PARTY WITHOUT PRIOR WRITTEN CONSENT OF LC FUTURE CENTER.

Title: HDMI RP

Size: Custom | Document Number: NM-A861 | Rev: 1.0

Date: Monday, August 01, 2016 | Sheet 27 of 80

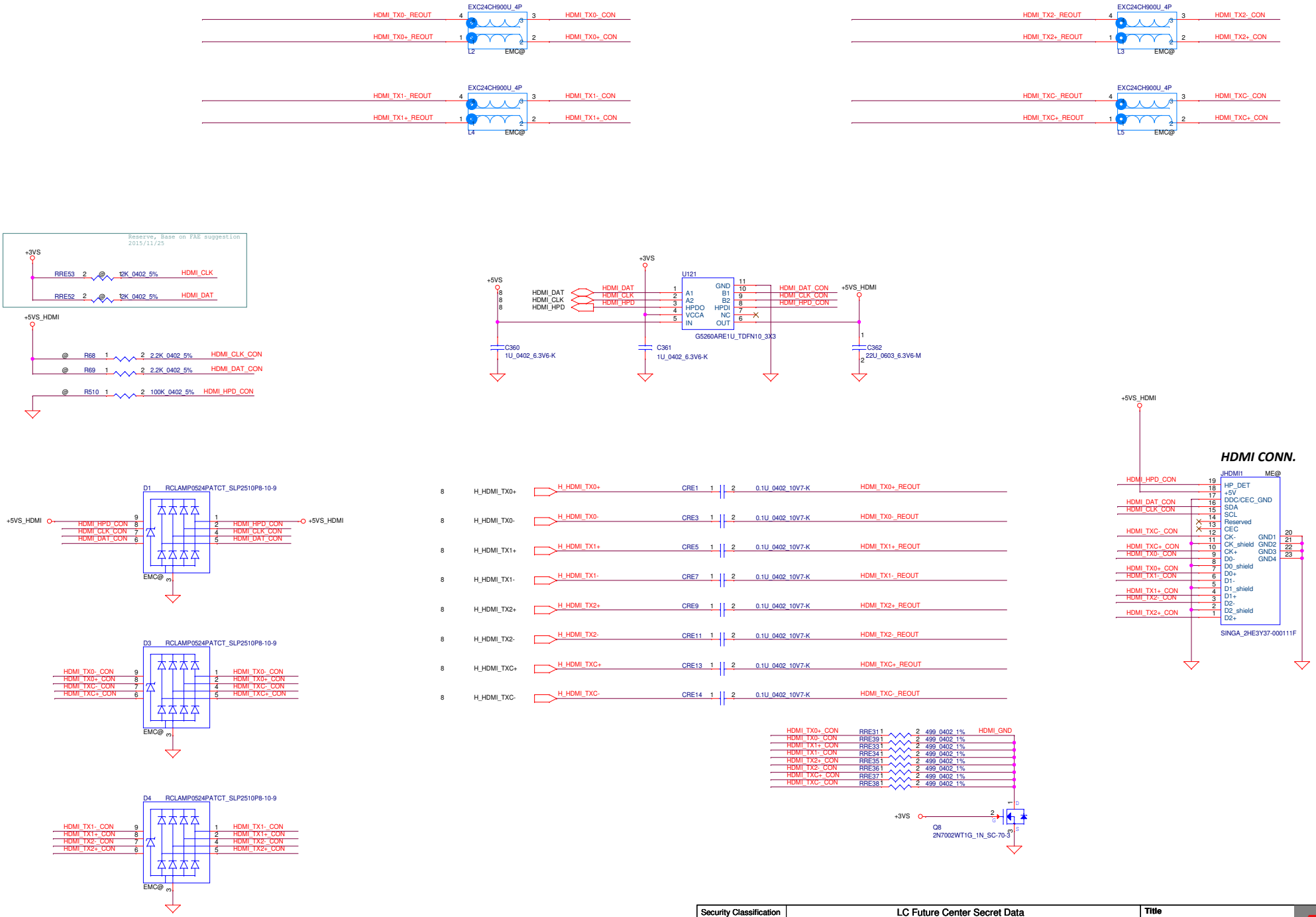

Security Classification	LC Future Center Secret Data		
Issued Date	2015/10/5	Deciphered Date	2016/12/31

THIS SHEET OF ENGINEERING DRAWING IS THE PROPRIETARY PROPERTY OF LC FUTURE CENTER, AND CONTAINS CONFIDENTIAL AND TRADE SECRET INFORMATION. THIS SHEET MAY NOT BE TRANSFERED FROM THE CUSTODY OF THE COMPETENT DIVISION OF R&D DEPARTMENT EXCEPT AS AUTHORIZED BY LC FUTURE CENTER NEITHER THIS SHEET NOR THE INFORMATION IT CONTAINS MAY BE USED BY OR DISCLOSED TO ANY THIRD PARTY WITHOUT PRIOR WRITTEN CONSENT OF LC FUTURE CENTER.

Title: **HDMI CONN**

Size: Custom | Document Number: NM-A861 | Rev: 1.0

Date: Monday, August 01, 2016 | Sheet 28 of 80

Security Classification	LC Future Center Secret Data		
Issued Date	2015/10/5	Deciphered Date	2014/09/07

THIS SHEET OF ENGINEERING DRAWING IS THE PROPRIETARY PROPERTY OF LC FUTURE CENTER, AND CONTAINS CONFIDENTIAL AND TRADE SECRET INFORMATION. THIS SHEET MAY NOT BE TRANSFERED FROM THE CUSTODY OF THE COMPETENT DIVISION OF R&D DEPARTMENT EXCEPT AS AUTHORIZED BY LC FUTURE CENTER NEITHER THIS SHEET NOR THE INFORMATION IT CONTAINS MAY BE USED BY OR DISCLOSED TO ANY THIRD PARTY WITHOUT PRIOR WRITTEN CONSENT OF LC FUTURE CENTER.

Title

XXXX

Size Custom	Document Number NM-A861	Rev 1.0
Date: Monday, August 01, 2016	Sheet 29 of 80	

Security Classification	LC Future Center Secret Data		
Issued Date	2015/10/5	Deciphered Date	2014/09/07

THIS SHEET OF ENGINEERING DRAWING IS THE PROPRIETARY PROPERTY OF LC FUTURE CENTER, AND CONTAINS CONFIDENTIAL AND TRADE SECRET INFORMATION. THIS SHEET MAY NOT BE TRANSFERED FROM THE CUSTODY OF THE COMPETENT DIVISION OF R&D DEPARTMENT EXCEPT AS AUTHORIZED BY LC FUTURE CENTER NEITHER THIS SHEET NOR THE INFORMATION IT CONTAINS MAY BE USED BY OR DISCLOSED TO ANY THIRD PARTY WITHOUT PRIOR WRITTEN CONSENT OF LC FUTURE CENTER.

Title

XXXX

Size: Custom

Document Number: NW-A861

Rev: 1.0

Date: Monday, August 01, 2016

Sheet 30 of 80

SATA HDD Redriver

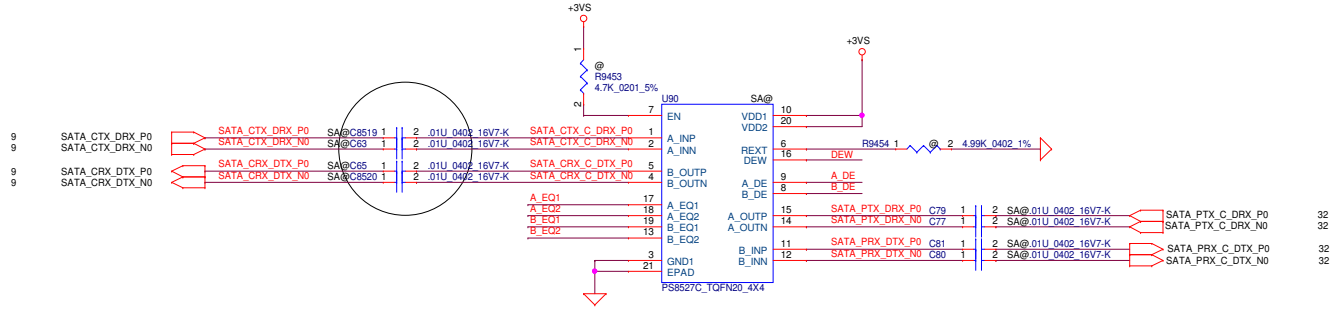

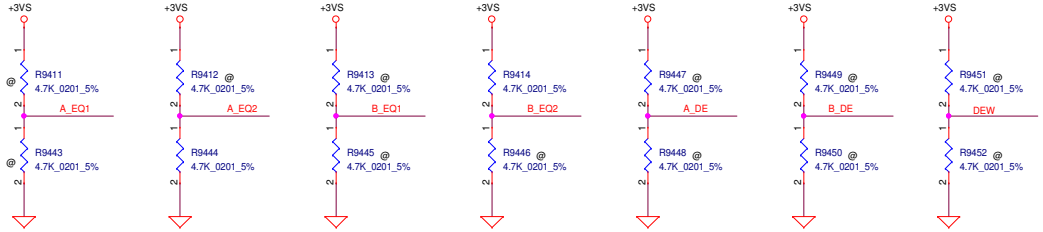

Change R9444, R9411,R9443 mount for SATA RX issue 4/21

Detele R9411,R9443, add R9414 for SATA RX issue 7/4

Equalization level setting for Channel x(x=A/B),
internally tied to VDD/2
[x_EQ2, x_EQ1] ==
L/M: for channel loss up to 2.4dB
L/L: for channel loss up to 7.4dB
L/H: for channel loss up to 14.4dB
M/M: for channel loss up to 12.2dB (default)
M/L: for channel loss up to 9.4dB
M/H: for channel loss up to 13.3dB
H/M: for channel loss up to 6.2dB
H/L: for channel loss up to 11.2dB
H/H: for channel loss up to 5dB

De-emphasis level setting for Channel x(x=A/B),
internally tied to VDD/2
[x_DE] ==
M: -3.5dB (default)
L: 0dB
H: -6dB

De-emphasis widith adjustment,
internally pulled down
[DEW] ==
M: for SATA3(default)
L: for SATA3
H: for SATA2

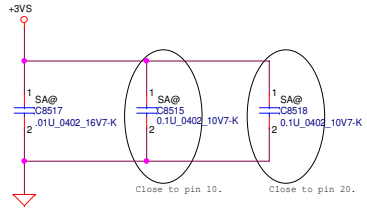

Security Classification	LC Future Center Secret Data		
Issued Date	2015/10/5	Deciphered Date	2014/09/07

THIS SHEET OF ENGINEERING DRAWING IS THE PROPRIETARY PROPERTY OF LC FUTURE CENTER, AND CONTAINS CONFIDENTIAL AND TRADE SECRET INFORMATION. THIS SHEET MAY NOT BE TRANSFERED FROM THE CUSTODY OF THE COMPETENT DIVISION OF R&D DEPARTMENT EXCEPT AS AUTHORIZED BY LC FUTURE CENTER NEITHER THIS SHEET NOR THE INFORMATION IT CONTAINS MAY BE USED BY OR DISCLOSED TO ANY THIRD PARTY WITHOUT PRIOR WRITTEN CONSENT OF LC FUTURE CENTER.

Title: BLANK

Size: Custom | Document Number: NM-A861 | Rev: 1.0

Date: Monday, August 01, 2016 | Sheet 31 of 80

SATA HDD CONN.

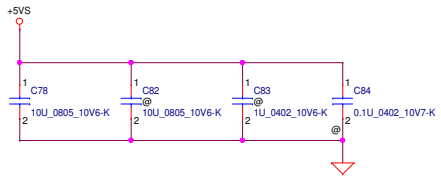

SATA HDD CONN.

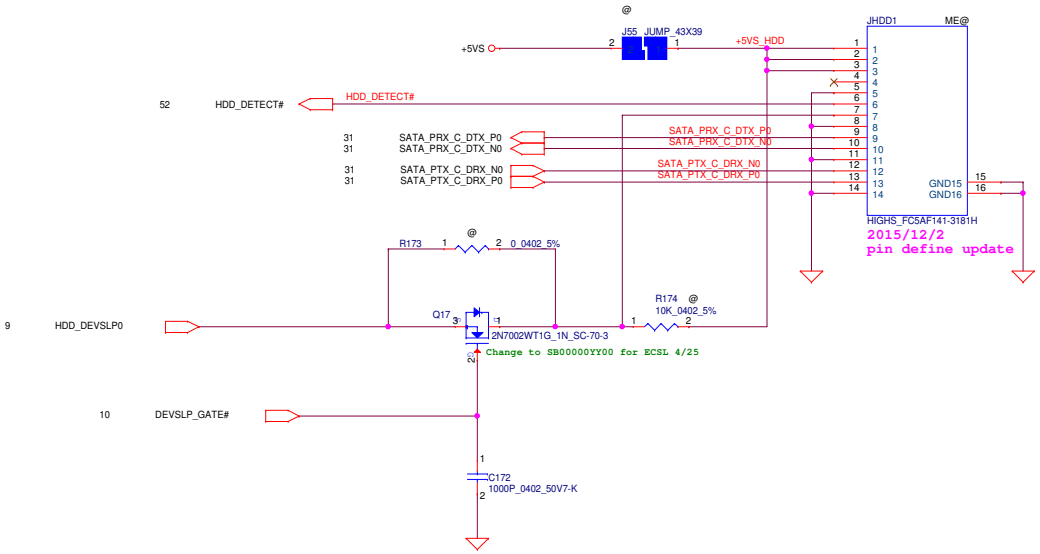

Security Classification	LC Future Center Secret Data		
Issued Date	2015/10/5	Deciphered Date	2016/12/31

THIS SHEET OF ENGINEERING DRAWING IS THE PROPRIETARY PROPERTY OF LC FUTURE CENTER, AND CONTAINS CONFIDENTIAL AND TRADE SECRET INFORMATION. THIS SHEET MAY NOT BE TRANSFERED FROM THE CUSTODY OF THE COMPETENT DIVISION OF R&D DEPARTMENT EXCEPT AS AUTHORIZED BY LC FUTURE CENTER NEITHER THIS SHEET NOR THE INFORMATION IT CONTAINS MAY BE USED BY OR DISCLOSED TO ANY THIRD PARTY WITHOUT PRIOR WRITTEN CONSENT OF LC FUTURE CENTER.

Title: SATA HDD

Size: Custom | Document Number: NM-A861 | Rev: 1.0

Date: Monday, August 01, 2016 | Sheet 32 of 80

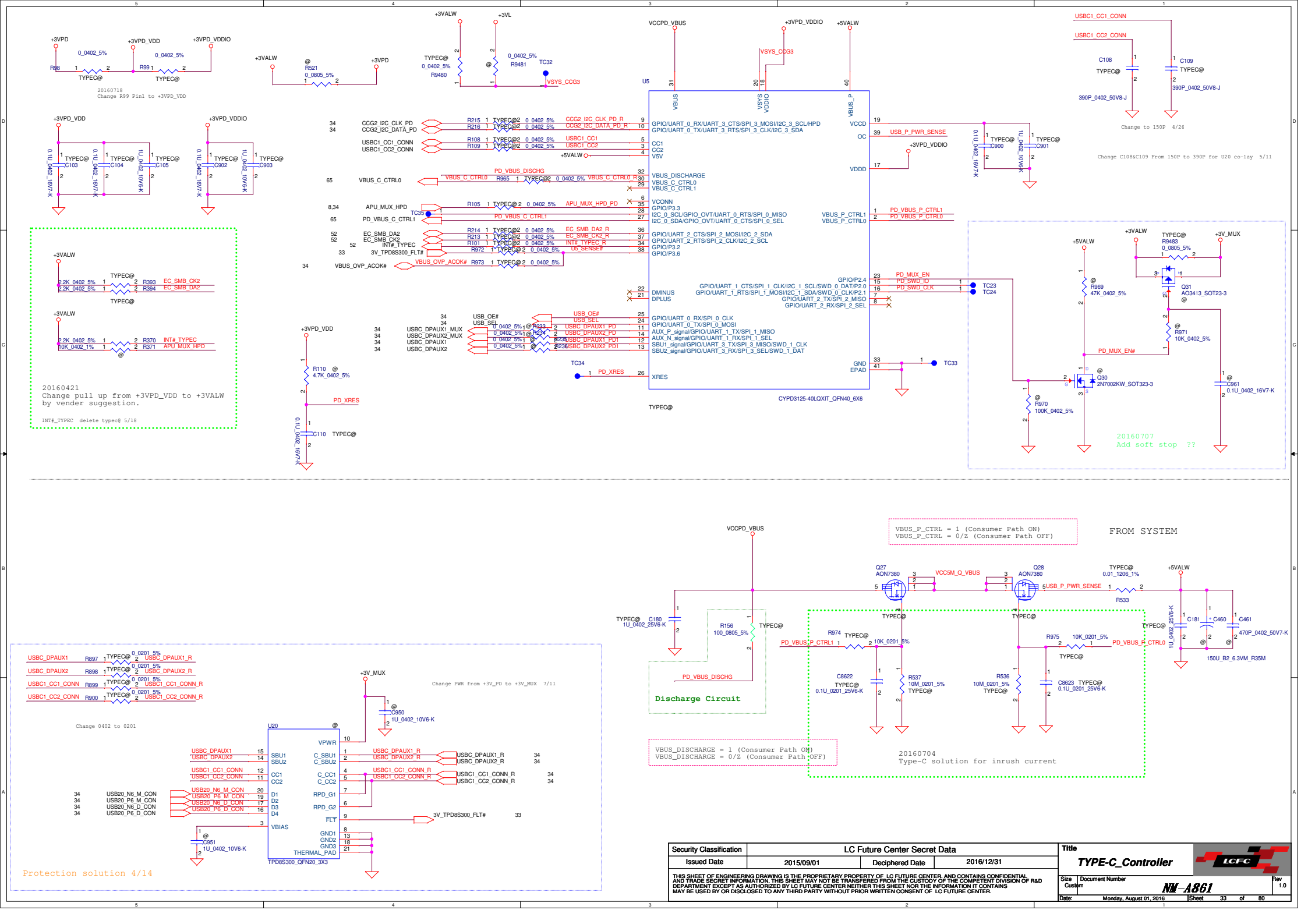
+3VPD
+3VPD_VDD
+3VPD_VDDIO
+3VALW
+3VL
VCCPD_VBUS
+5VALW
U5
CYPD3125-40LQXIT_QFN40_6X6
GPIO/UART_0_RX/UART_3_CTS/SPI_3_MOSI/I2C_3_SCL/HPD
GPIO/UART_0_TX/UART_3_RTS/SPI_3_CLK/I2C_3_SDA
VBUS_DISCHARGE
VBUS_C_CTRL0
VBUS_C_CTRL1
VCONN
GPIO/P3.3
I2C_0_SCL/GPIO_OVT/UART_0_RTS/SPI_0_MISO
I2C_0_SDA/GPIO_OVT/UART_0_CTS/SPI_0_SEL
GPIO/UART_2_CTS/SPI_2_MOSI/I2C_2_SDA
GPIO/UART_2_RTS/SPI_2_CLK/I2C_2_SCL
GPIO/P3.2
GPIO/P3.6
GPIO/P2.4
GPIO/UART_1_CTS/SPI_1_CLK/I2C_1_SCL/SWD_0_DAT/P2.0
GPIO/UART_1_RTS/SPI_1_MOSI/I2C_1_SDA/SWD_0_CLK/P2.1
GPIO/UART_2_TX/SPI_2_MISO
GPIO/UART_2_RX/SPI_2_SEL
GPIO/UART_0_RX/SPI_0_CLK
GPIO/UART_0_TX/SPI_0_MOSI
AUX_P_signal/GPIO/UART_1_TX/SPI_1_MISO
AUX_N_signal/GPIO/UART_1_RX/SPI_1_SEL
SBU1_signal/GPIO/UART_3_TX/SPI_3_MISO/SWD_1_CLK
SBU2_signal/GPIO/UART_3_RX/SPI_3_SEL/SWD_1_DAT
VBUS_P_CTRL1
VBUS_P_CTRL0
DMINUS
DPLUS
XRES
VCCD
OC
VDDD
GND
EPAD
USBC1_CC1_CONN
USBC1_CC2_CONN
C108
C109
390P_0402_50V8-J
Change to 150P 4/26
Change C108&C109 From 150P to 390P for U20 co-lay 5/11
20160718
Change R99 Pin1 to +3VPD_VDD
20160421
Change pull up from +3VPD_VDD to +3VALW
by vender suggestion.
INT#_TYPEC delete typec@ 5/18
20160707
Add soft stop ??
Q30
2N7002KW_SOT323-3
Q31
AO3413_SOT23-3
VBUS_P_CTRL = 1 (Consumer Path ON)
VBUS_P_CTRL = 0/Z (Consumer Path OFF)
FROM SYSTEM
Q27
AON7380
Q28
AON7380
VCC5M_Q_VBUS
USB_P_PWR_SENSE
Discharge Circuit
PD_VBUS_DISCHG
VBUS_DISCHARGE = 1 (Consumer Path ON)
VBUS_DISCHARGE = 0/Z (Consumer Path OFF)
20160704
Type-C solution for inrush current
Change PWR from +3V_PD to +3V_MUX 7/11
Change 0402 to 0201
U20
TPD8S300_QFN20_3X3
Protection solution 4/14
Security Classification
LC Future Center Secret Data
Issued Date
2015/09/01
Deciphered Date
2016/12/31
THIS SHEET OF ENGINEERING DRAWING IS THE PROPRIETARY PROPERTY OF LC FUTURE CENTER, AND CONTAINS CONFIDENTIAL AND TRADE SECRET INFORMATION. THIS SHEET MAY NOT BE TRANSFERED FROM THE CUSTODY OF THE COMPETENT DIVISION OF R&D DEPARTMENT EXCEPT AS AUTHORIZED BY LC FUTURE CENTER NEITHER THIS SHEET NOR THE INFORMATION IT CONTAINS MAY BE USED BY OR DISCLOSED TO ANY THIRD PARTY WITHOUT PRIOR WRITTEN CONSENT OF LC FUTURE CENTER.
Title
TYPE-C_Controller
Size
Custom
Document Number
NM-A861
Rev
1.0
Date:
Monday, August 01, 2016
Sheet
33
of
80

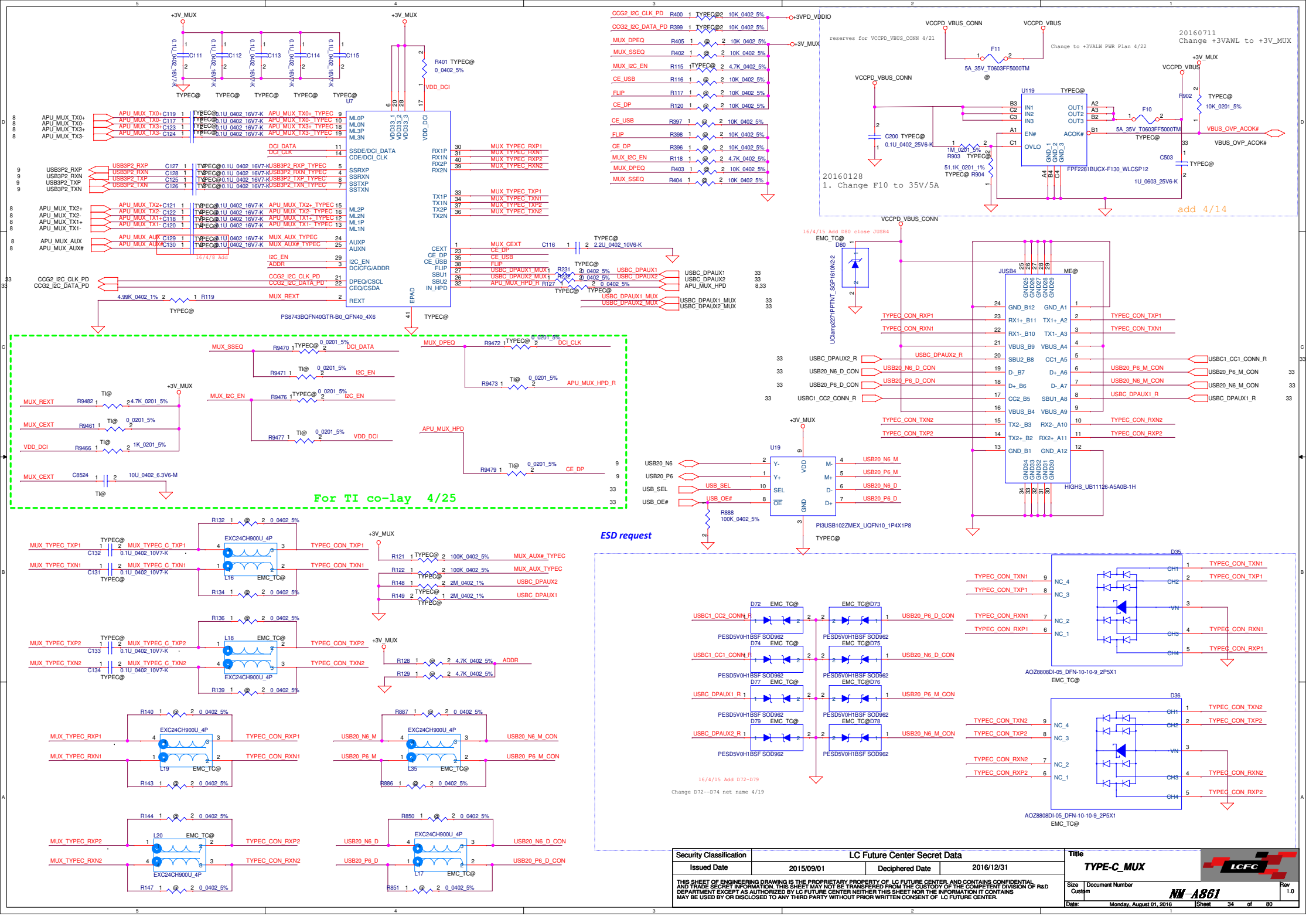
PS8743BQFN40GTR-B0_QFN40_4X6
U7
U19
PI3USB102ZMEX_UQFN10_1P4X1P8
JUSB4
HIGHS_UB11126-A5A0B-1H
U119
FPF2281BUCX-F130_WLCSP12
D35
D36
AOZ8808DI-05_DFN-10-10-9_2P5X1
For TI co-lay 4/25
ESD request
20160711
Change +3VAWL to +3V_MUX
20160128
1. Change F10 to 35V/5A
add 4/14
16/4/15 Add D80 close JUSB4
16/4/15 Add D72~D79
Change D72--D74 net name 4/19
Security Classification
LC Future Center Secret Data
Issued Date
2015/09/01
Deciphered Date
2016/12/31
THIS SHEET OF ENGINEERING DRAWING IS THE PROPRIETARY PROPERTY OF LC FUTURE CENTER, AND CONTAINS CONFIDENTIAL AND TRADE SECRET INFORMATION. THIS SHEET MAY NOT BE TRANSFERED FROM THE CUSTODY OF THE COMPETENT DIVISION OF R&D DEPARTMENT EXCEPT AS AUTHORIZED BY LC FUTURE CENTER NEITHER THIS SHEET NOR THE INFORMATION IT CONTAINS MAY BE USED BY OR DISCLOSED TO ANY THIRD PARTY WITHOUT PRIOR WRITTEN CONSENT OF LC FUTURE CENTER.
Title
TYPE-C_MUX
Size
Custom
Document Number
NM-A861
Rev
1.0
Date:
Monday, August 01, 2016
Sheet
34
of
80

Security Classification	LC Future Center Secret Data		
Issued Date	2015/10/5	Deciphered Date	2016/12/31

THIS SHEET OF ENGINEERING DRAWING IS THE PROPRIETARY PROPERTY OF LC FUTURE CENTER. AND CONTAINS CONFIDENTIAL AND TRADE SECRET INFORMATION. THIS SHEET MAY NOT BE TRANSFERED FROM THE CUSTODY OF THE COMPETENT DIVISION OF R&D DEPARTMENT EXCEPT AS AUTHORIZED BY LC FUTURE CENTER NEITHER THIS SHEET NOR THE INFORMATION IT CONTAINS MAY BE USED BY OR DISCLOSED TO ANY THIRD PARTY WITHOUT PRIOR WRITTEN CONSENT OF LC FUTURE CENTER.

Title

Blank

Size	Document Number	Rev
Custom	NM-A861	1.0

Date: Monday, August 01, 2016 | Sheet 35 of 80

BLANK

Security Classification	LC Future Center Secret Data		
Issued Date	2015/10/5	Deciphered Date	2014/09/07

THIS SHEET OF ENGINEERING DRAWING IS THE PROPRIETARY PROPERTY OF LC FUTURE CENTER, AND CONTAINS CONFIDENTIAL AND TRADE SECRET INFORMATION. THIS SHEET MAY NOT BE TRANSFERED FROM THE CUSTODY OF THE COMPETENT DIVISION OF R&D DEPARTMENT EXCEPT AS AUTHORIZED BY LC FUTURE CENTER NEITHER THIS SHEET NOR THE INFORMATION IT CONTAINS MAY BE USED BY OR DISCLOSED TO ANY THIRD PARTY WITHOUT PRIOR WRITTEN CONSENT OF LC FUTURE CENTER.

Title: BLANK

Size: Custom | Document Number: NW-A861 | Rev: 1.0

Date: Monday, August 01, 2016 | Sheet 36 of 80

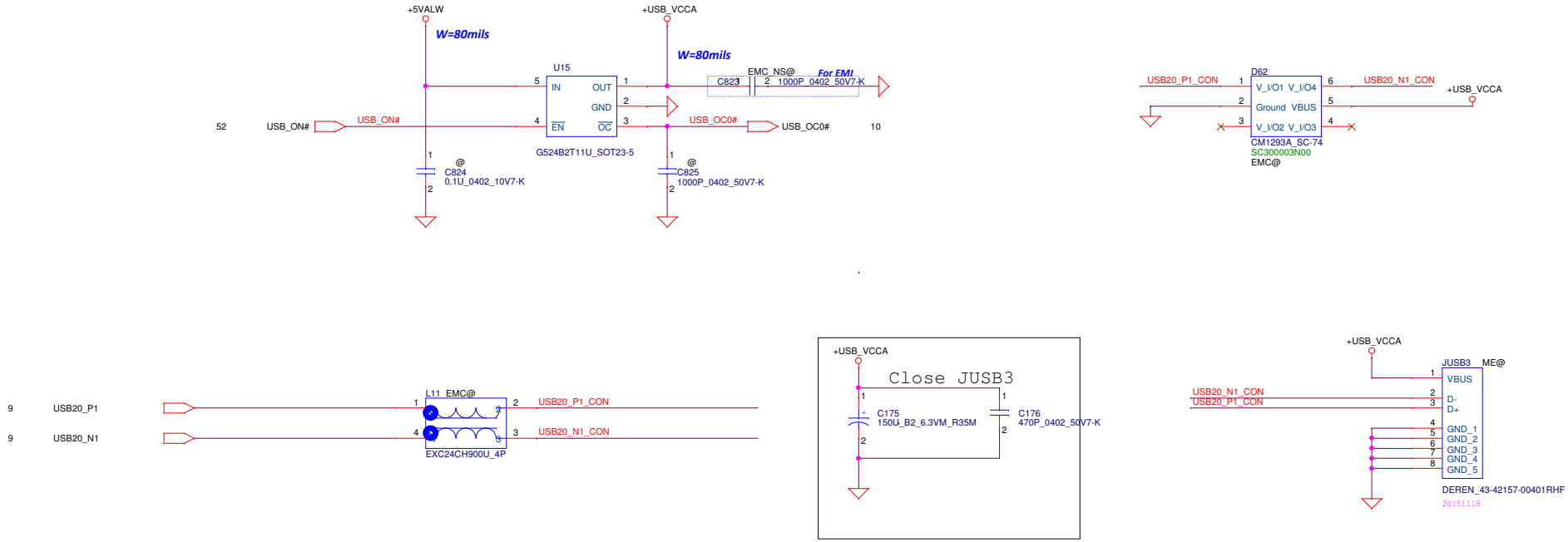

Security Classification	LC Future Center Secret Data		
Issued Date	2015/10/5	Deciphered Date	2014/09/07

THIS SHEET OF ENGINEERING DRAWING IS THE PROPRIETARY PROPERTY OF LC FUTURE CENTER, AND CONTAINS CONFIDENTIAL AND TRADE SECRET INFORMATION. THIS SHEET MAY NOT BE TRANSFERED FROM THE CUSTODY OF THE COMPETENT DIVISION OF R&D DEPARTMENT EXCEPT AS AUTHORIZED BY LC FUTURE CENTER NEITHER THIS SHEET NOR THE INFORMATION IT CONTAINS MAY BE USED BY OR DISCLOSED TO ANY THIRD PARTY WITHOUT PRIOR WRITTEN CONSENT OF LC FUTURE CENTER.

Title: USB2 PORT3

Size: Custom | Document Number: NW-A861 | Rev: 1.0

Date: Monday, August 01, 2016 | Sheet 37 of 80

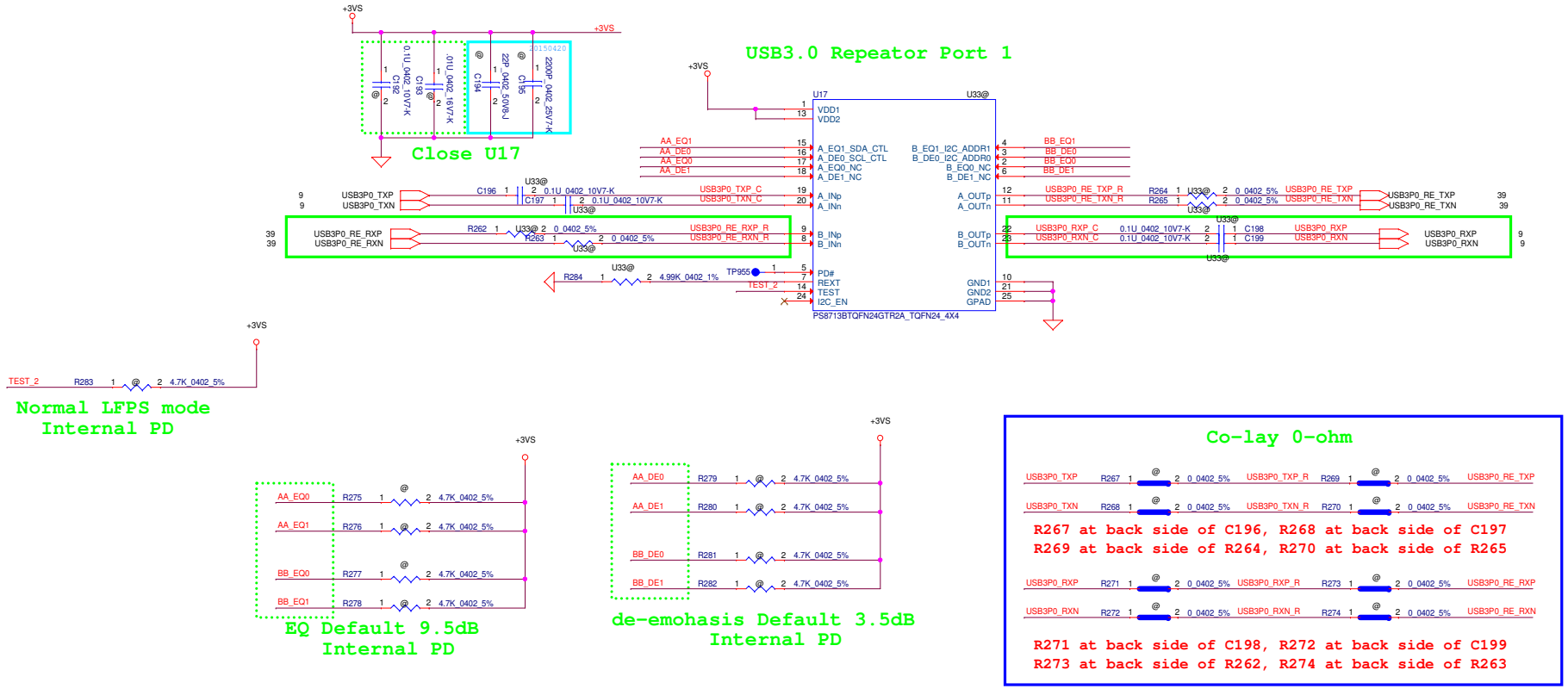

Security Classification	LC Future Center Secret Data		
Issued Date	2015/10/5	Deciphered Date	2016/12/31

THIS SHEET OF ENGINEERING DRAWING IS THE PROPRIETARY PROPERTY OF LC FUTURE CENTER, AND CONTAINS CONFIDENTIAL AND TRADE SECRET INFORMATION. THIS SHEET MAY NOT BE TRANSFERED FROM THE CUSTODY OF THE COMPETENT DIVISION OF R&D DEPARTMENT EXCEPT AS AUTHORIZED BY LC FUTURE CENTER NEITHER THIS SHEET NOR THE INFORMATION IT CONTAINS MAY BE USED BY OR DISCLOSED TO ANY THIRD PARTY WITHOUT PRIOR WRITTEN CONSENT OF LC FUTURE CENTER.

Title: USB Port2/3

Size: Custom | Document Number: NM-A861 | Rev: 1.0

Date: Monday, August 01, 2016 | Sheet 38 of 80

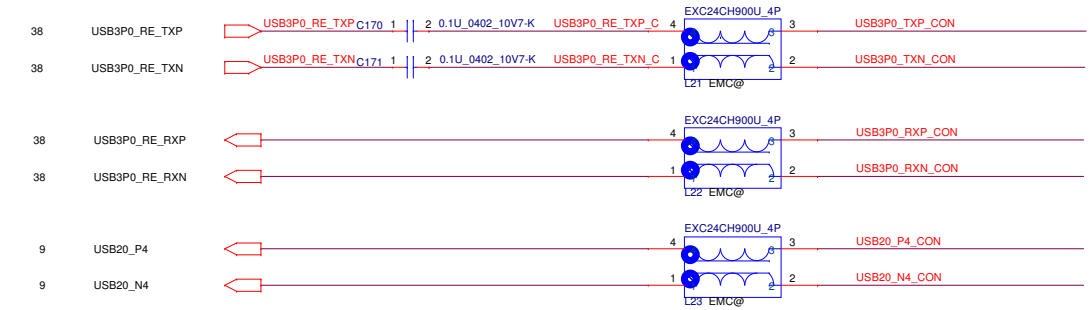

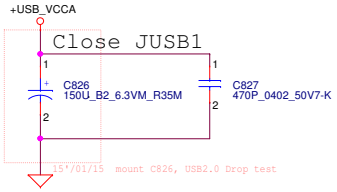

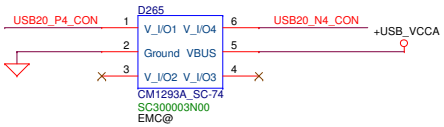

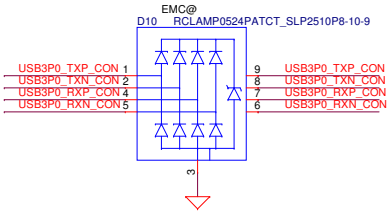

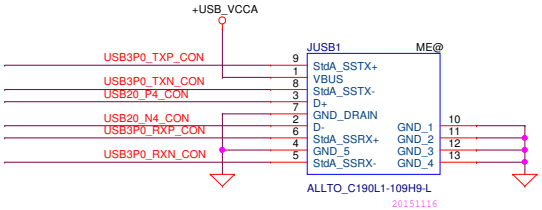

Security Classification	LC Future Center Secret Data		
Issued Date	2015/10/5	Deciphered Date	2014/09/07

THIS SHEET OF ENGINEERING DRAWING IS THE PROPRIETARY PROPERTY OF LC FUTURE CENTER. AND CONTAINS CONFIDENTIAL AND TRADE SECRET INFORMATION. THIS SHEET MAY NOT BE TRANSFERED FROM THE CUSTODY OF THE COMPETENT DIVISION OF R&D DEPARTMENT EXCEPT AS AUTHORIZED BY LC FUTURE CENTER NEITHER THIS SHEET NOR THE INFORMATION IT CONTAINS MAY BE USED BY OR DISCLOSED TO ANY THIRD PARTY WITHOUT PRIOR WRITTEN CONSENT OF LC FUTURE CENTER.

Title: USB3 PORT1

Size: Custom | Document Number: NW-A861 | Rev: 1.0

Date: Monday, August 01, 2016 | Sheet 39 of 80

PORT1 (AOU)

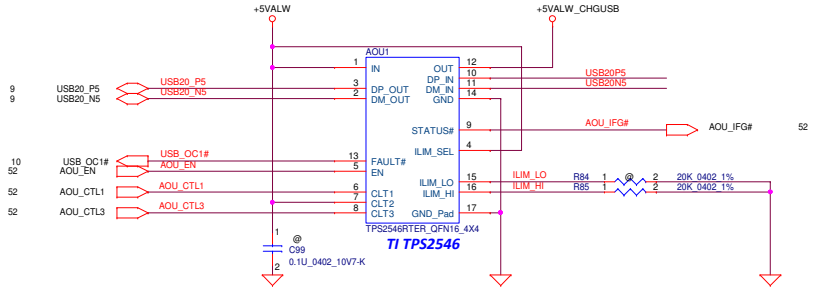

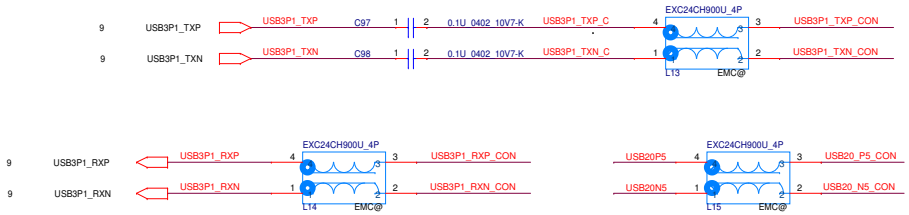

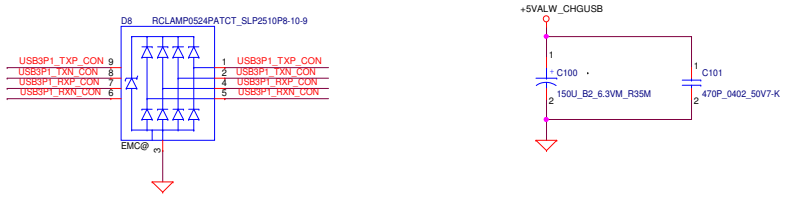

	CLT1	CLT2	CLT3	ILIM_SEL	MOD	
	0	0	0	X	**DCH**	OUT held low
*	1	1	1	1	**CDP**	Data Connected and Port Power Mgt. Function Active
*	1	1	1	0	**SDP2**	Data Connected
*	1	1	0	X	**SDP1**	Data Connected
*	0	1	0	X	**SDP1**	Data Connected
	1	0	0	X	**DCP_Short**	Device Forced to stay in DCP BC 1.2 charging mode
	1	0	1	X	**DCP_Divider**	Device Forced to stay in DCP Divider 1 Charging Mode
*	0	1	1	X	**DCP_Auto**	Data Disconnected and Port Power Mgt. Function Active
	0	0	1	X	**DCP_Auto**	Data Disconnected and Power Wake Function Active

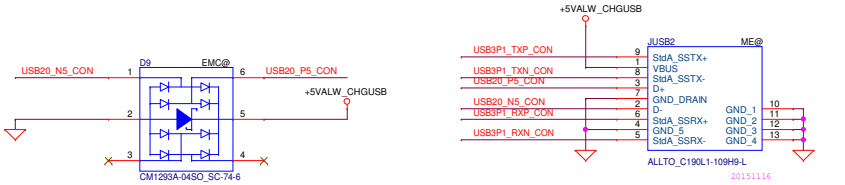

Security Classification	LC Future Center Secret Data		
Issued Date	2015/10/5	Deciphered Date	2016/12/31

THIS SHEET OF ENGINEERING DRAWING IS THE PROPRIETARY PROPERTY OF LC FUTURE CENTER, AND CONTAINS CONFIDENTIAL AND TRADE SECRET INFORMATION. THIS SHEET MAY NOT BE TRANSFERED FROM THE CUSTODY OF THE COMPETENT DIVISION OF R&D DEPARTMENT EXCEPT AS AUTHORIZED BY LC FUTURE CENTER NEITHER THIS SHEET NOR THE INFORMATION IT CONTAINS MAY BE USED BY OR DISCLOSED TO ANY THIRD PARTY WITHOUT PRIOR WRITTEN CONSENT OF LC FUTURE CENTER.

Title: **USB3 PORT2(AOU)**

Size: C | Document Number: NM-A861 | Rev: 1.0

Date: Monday, August 01, 2016 | Sheet 40 of 80

BLANK

Security Classification	LC Future Center Secret Data		
Issued Date	2015/10/5	Deciphered Date	2014/09/07

THIS SHEET OF ENGINEERING DRAWING IS THE PROPRIETARY PROPERTY OF LC FUTURE CENTER, AND CONTAINS CONFIDENTIAL AND TRADE SECRET INFORMATION. THIS SHEET MAY NOT BE TRANSFERED FROM THE CUSTODY OF THE COMPETENT DIVISION OF R&D DEPARTMENT EXCEPT AS AUTHORIZED BY LC FUTURE CENTER NEITHER THIS SHEET NOR THE INFORMATION IT CONTAINS MAY BE USED BY OR DISCLOSED TO ANY THIRD PARTY WITHOUT PRIOR WRITTEN CONSENT OF LC FUTURE CENTER.

Title		
DC V TO VS/ V-PCH/VM		
Size: Custom	Document Number: NM-A861	Rev: 1.0
Date: Monday, August 01, 2016	Sheet 41 of 80	

Security Classification	LC Future Center Secret Data		
Issued Date	2015/10/5	Deciphered Date	2014/09/07

THIS SHEET OF ENGINEERING DRAWING IS THE PROPRIETARY PROPERTY OF LC FUTURE CENTER. AND CONTAINS CONFIDENTIAL AND TRADE SECRET INFORMATION. THIS SHEET MAY NOT BE TRANSFERED FROM THE CUSTODY OF THE COMPETENT DIVISION OF R&D DEPARTMENT EXCEPT AS AUTHORIZED BY LC FUTURE CENTER NEITHER THIS SHEET NOR THE INFORMATION IT CONTAINS MAY BE USED BY OR DISCLOSED TO ANY THIRD PARTY WITHOUT PRIOR WRITTEN CONSENT OF LC FUTURE CENTER.

Title

XXXX

Size	Document Number	Rev
Custom	NM-A861	1.0

Date: Monday, August 01, 2016 Sheet 42 of 80

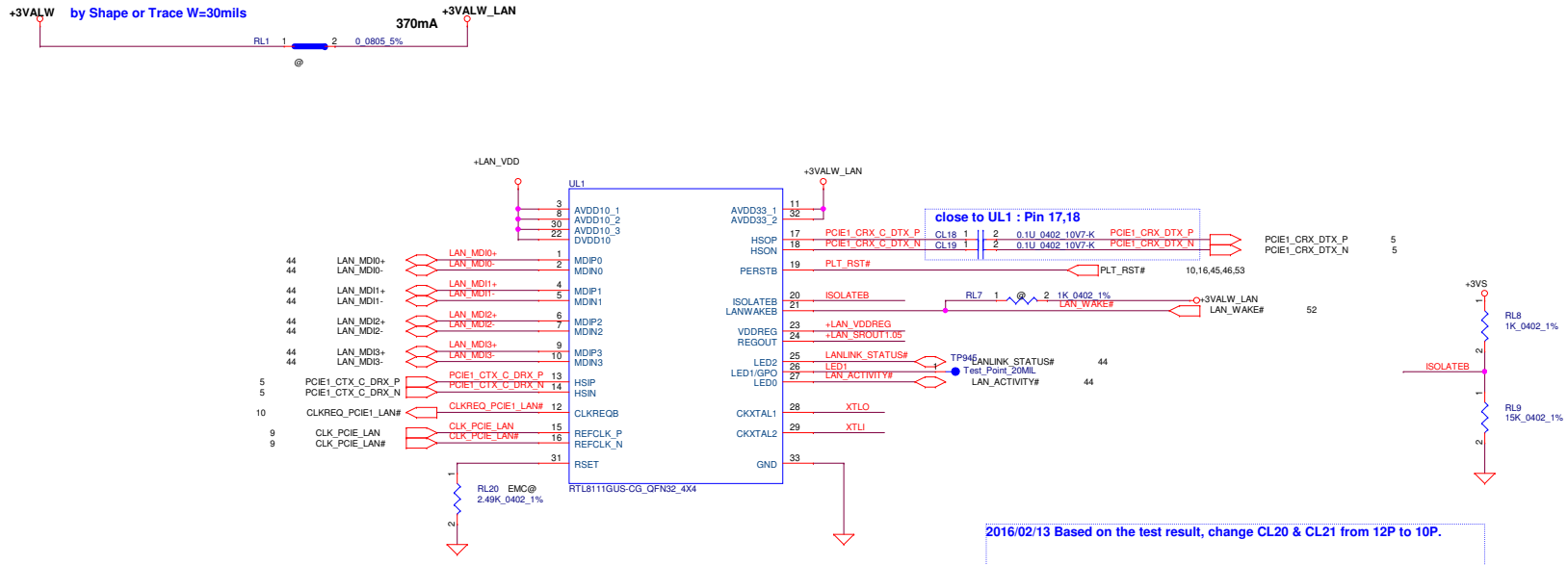

+3VALW_LAN Rising time (10%~90%) >1mS and <100mS

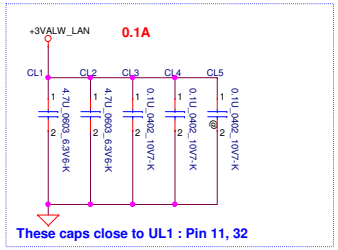

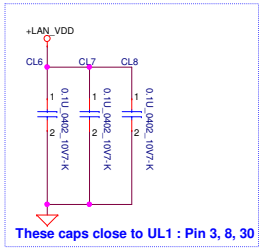

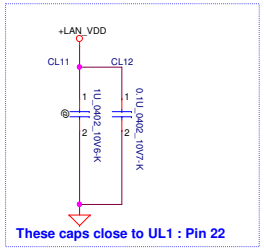

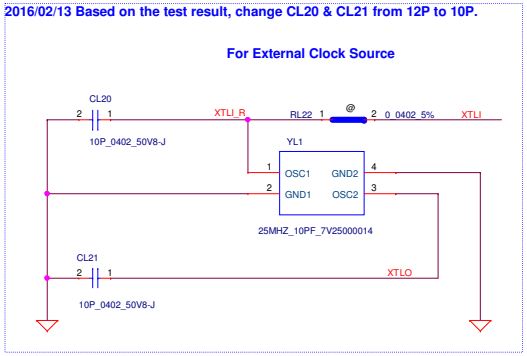

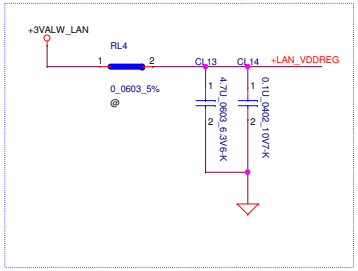

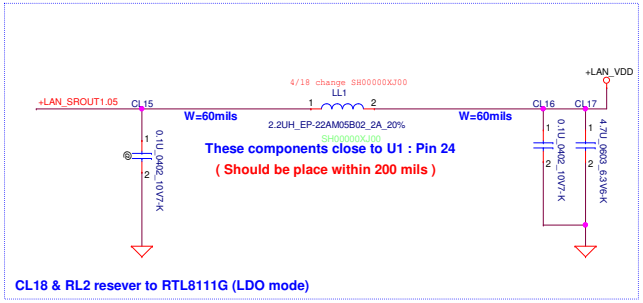

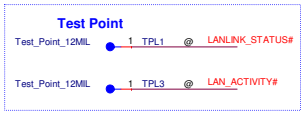

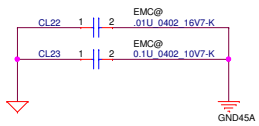

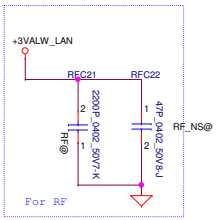

Security Classification	LC Future Center Secret Data		
Issued Date	2015/10/5	Deciphered Date	2014/09/07

THIS SHEET OF ENGINEERING DRAWING IS THE PROPRIETARY PROPERTY OF LC FUTURE CENTER, AND CONTAINS CONFIDENTIAL AND TRADE SECRET INFORMATION. THIS SHEET MAY NOT BE TRANSFERED FROM THE CUSTODY OF THE COMPETENT DIVISION OF R&D DEPARTMENT EXCEPT AS AUTHORIZED BY LC FUTURE CENTER NEITHER THIS SHEET NOR THE INFORMATION IT CONTAINS MAY BE USED BY OR DISCLOSED TO ANY THIRD PARTY WITHOUT PRIOR WRITTEN CONSENT OF LC FUTURE CENTER.

Title: GBE LAN PHY

Size: Custom | Document Number: NM-A861 | Rev: 1.0

Date: Monday, August 01, 2016 | Sheet 43 of 80

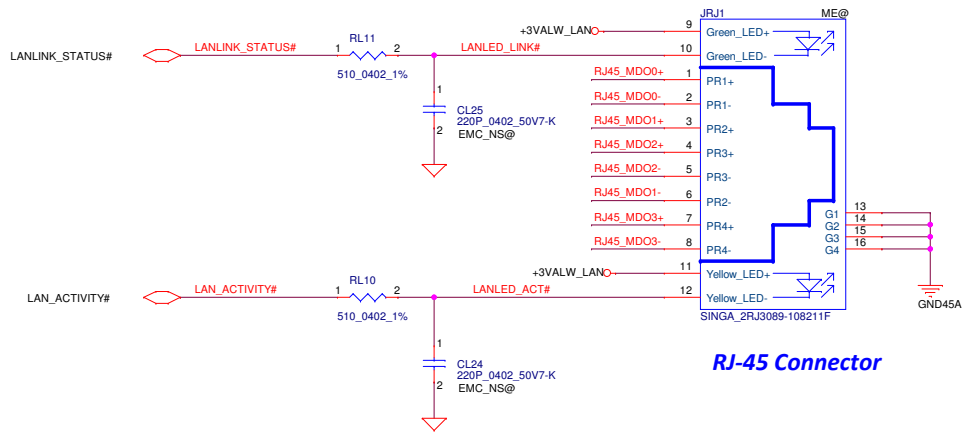

RJ-45 Connector

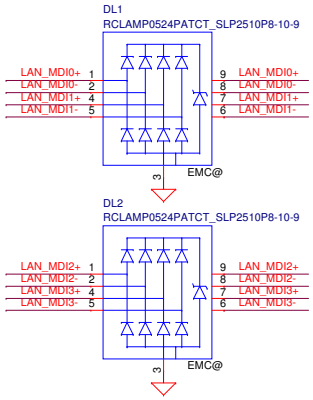

EMI

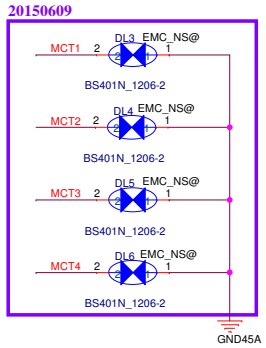

Reserve for Surge

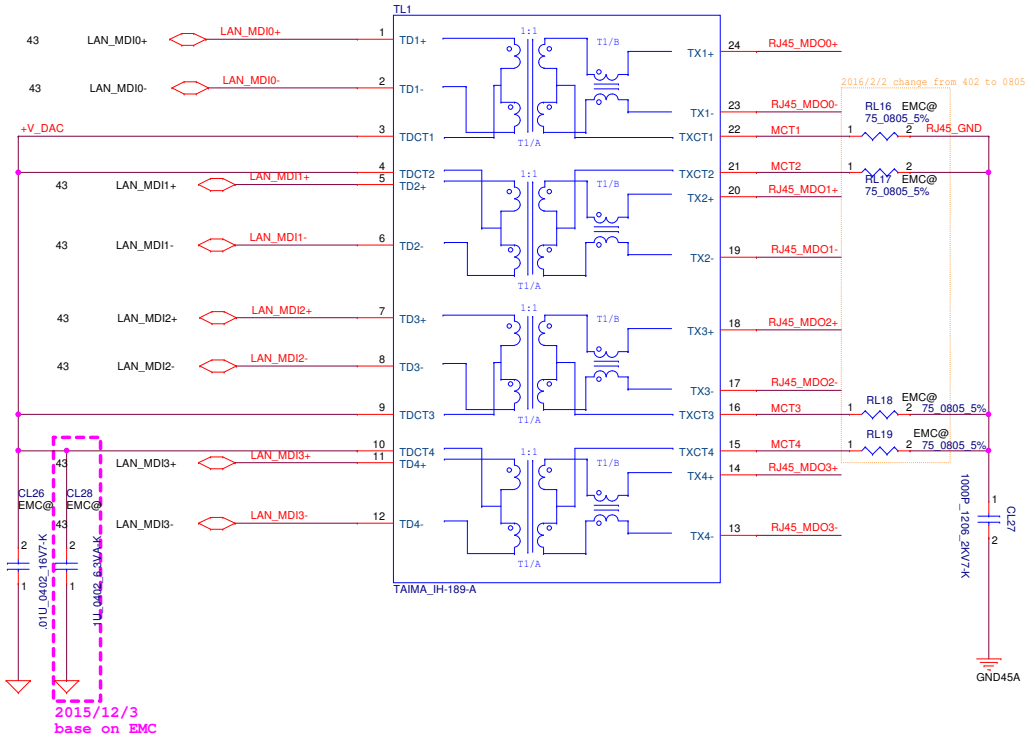

Security Classification	LC Future Center Secret Data		
Issued Date	2015/10/5	Deciphered Date	2014/09/07

THIS SHEET OF ENGINEERING DRAWING IS THE PROPRIETARY PROPERTY OF LC FUTURE CENTER, AND CONTAINS CONFIDENTIAL AND TRADE SECRET INFORMATION. THIS SHEET MAY NOT BE TRANSFERED FROM THE CUSTODY OF THE COMPETENT DIVISION OF R&D DEPARTMENT EXCEPT AS AUTHORIZED BY LC FUTURE CENTER NEITHER THIS SHEET NOR THE INFORMATION IT CONTAINS MAY BE USED BY OR DISCLOSED TO ANY THIRD PARTY WITHOUT PRIOR WRITTEN CONSENT OF LC FUTURE CENTER.

Title: **RJ45 CONN.**

Size: Custom | Document Number: NW-A861 | Rev: 1.0

Date: Monday, August 01, 2016 | Sheet 44 of 80

TYPE-A NGFF CCARD FOR WLAN

3.2H CONNECTOR

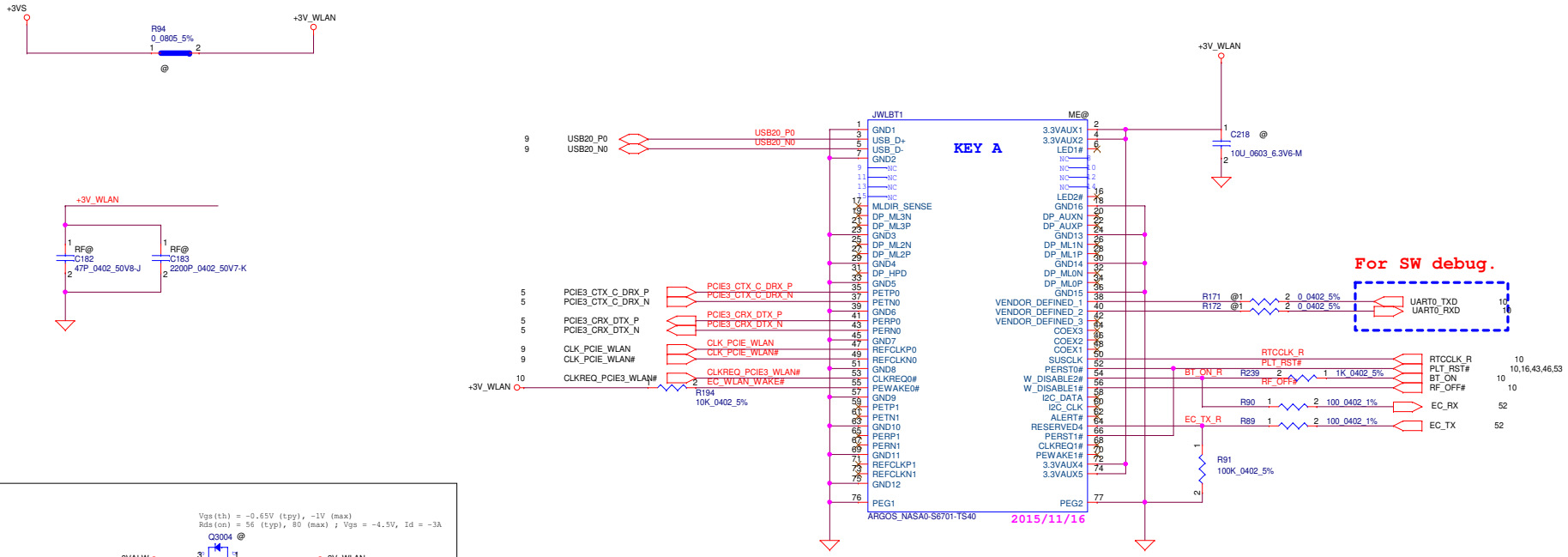

Security Classification	LC Future Center Secret Data		
Issued Date	2015/10/5	Deciphered Date	2016/12/31

THIS SHEET OF ENGINEERING DRAWING IS THE PROPRIETARY PROPERTY OF LC FUTURE CENTER. AND CONTAINS CONFIDENTIAL AND TRADE SECRET INFORMATION. THIS SHEET MAY NOT BE TRANSFERED FROM THE CUSTODY OF THE COMPETENT DIVISION OF R&D DEPARTMENT EXCEPT AS AUTHORIZED BY LC FUTURE CENTER NEITHER THIS SHEET NOR THE INFORMATION IT CONTAINS MAY BE USED BY OR DISCLOSED TO ANY THIRD PARTY WITHOUT PRIOR WRITTEN CONSENT OF LC FUTURE CENTER.

Title: WWAN/WLAN NGFF CONN.

Size: Custom | Document Number: NW-A861 | Rev: 1.0

Date: Monday, August 01, 2016 | Sheet 45 of 80

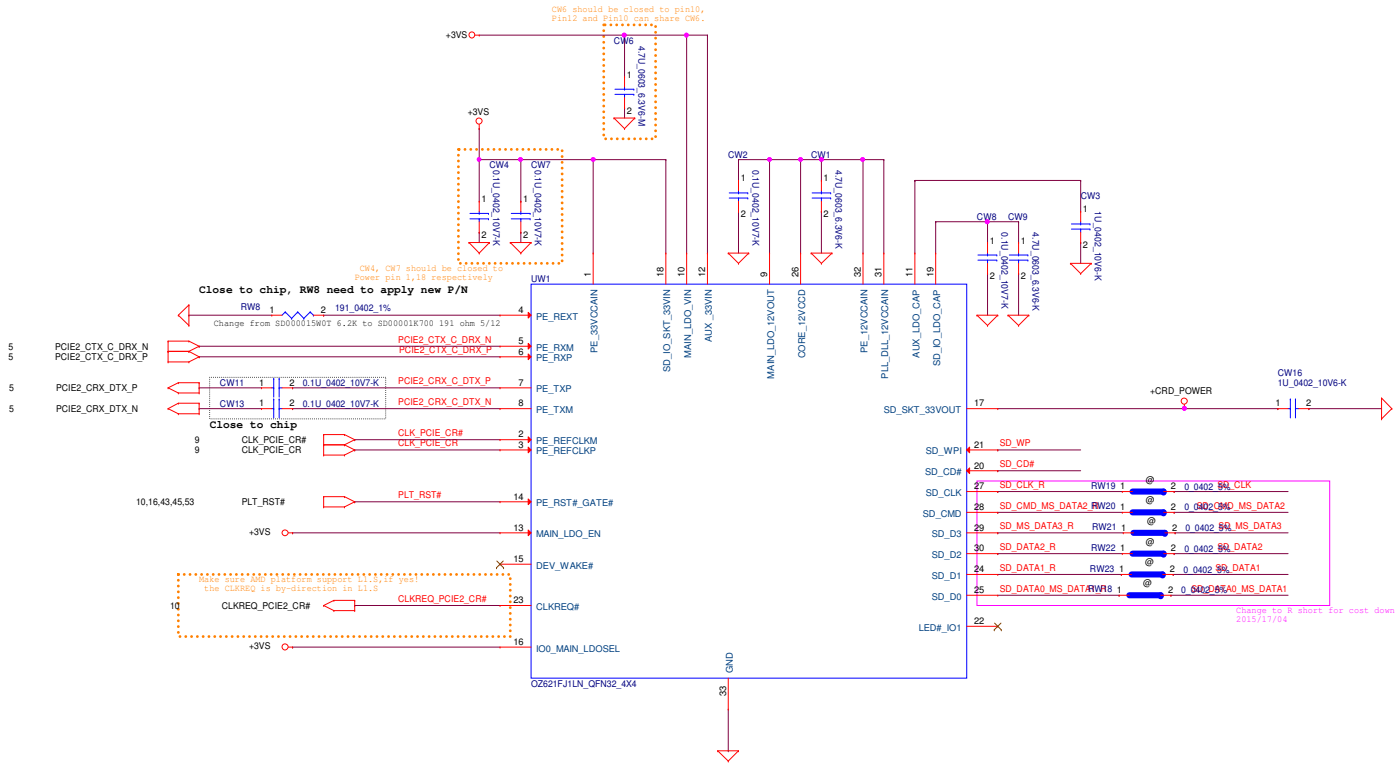

for E Series 14''

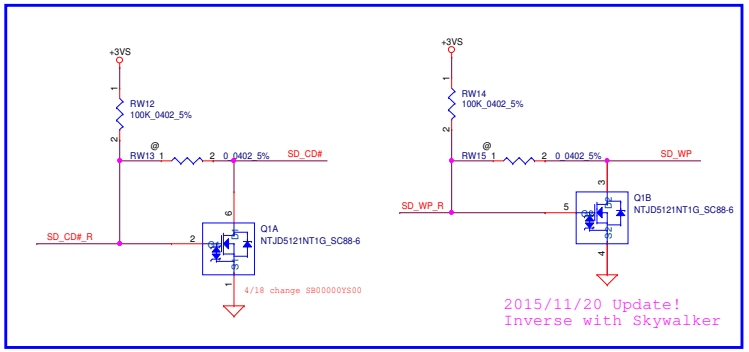

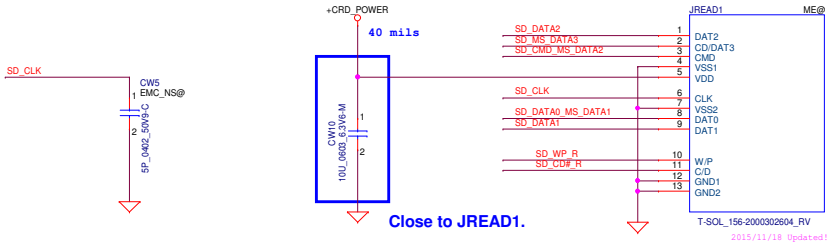

Connector side / IC side	WP		CD
	Lock	Unlock	
Card insertion	L / H	H / L	H / L
Card uninsertion	L / H	L / H	L / H

Security Classification	LC Future Center Secret Data		
Issued Date	2015/10/5	Deciphered Date	2016/12/31

THIS SHEET OF ENGINEERING DRAWING IS THE PROPRIETARY PROPERTY OF LC FUTURE CENTER, AND CONTAINS CONFIDENTIAL AND TRADE SECRET INFORMATION. THIS SHEET MAY NOT BE TRANSFERED FROM THE CUSTODY OF THE COMPETENT DIVISION OF R&D DEPARTMENT EXCEPT AS AUTHORIZED BY LC FUTURE CENTER NEITHER THIS SHEET NOR THE INFORMATION IT CONTAINS MAY BE USED BY OR DISCLOSED TO ANY THIRD PARTY WITHOUT PRIOR WRITTEN CONSENT OF LC FUTURE CENTER.

Title: **Card Reader**

Size: C | Document Number: NM-A861 | Rev: 1.0

Date: Monday, August 01, 2016 | Sheet 46 of 80

BLANK

Security Classification	LC Future Center Secret Data		
Issued Date	2015/10/5	Deciphered Date	2016/12/31

THIS SHEET OF ENGINEERING DRAWING IS THE PROPRIETARY PROPERTY OF LC FUTURE CENTER, AND CONTAINS CONFIDENTIAL AND TRADE SECRET INFORMATION. THIS SHEET MAY NOT BE TRANSFERED FROM THE CUSTODY OF THE COMPETENT DIVISION OF R&D DEPARTMENT EXCEPT AS AUTHORIZED BY LC FUTURE CENTER NEITHER THIS SHEET NOR THE INFORMATION IT CONTAINS MAY BE USED BY OR DISCLOSED TO ANY THIRD PARTY WITHOUT PRIOR WRITTEN CONSENT OF LC FUTURE CENTER.

Title: BLANK

Size: Custom | Document Number: NW-A861 | Rev: 1.0

Date: Monday, August 01, 2016 | Sheet 47 of 80

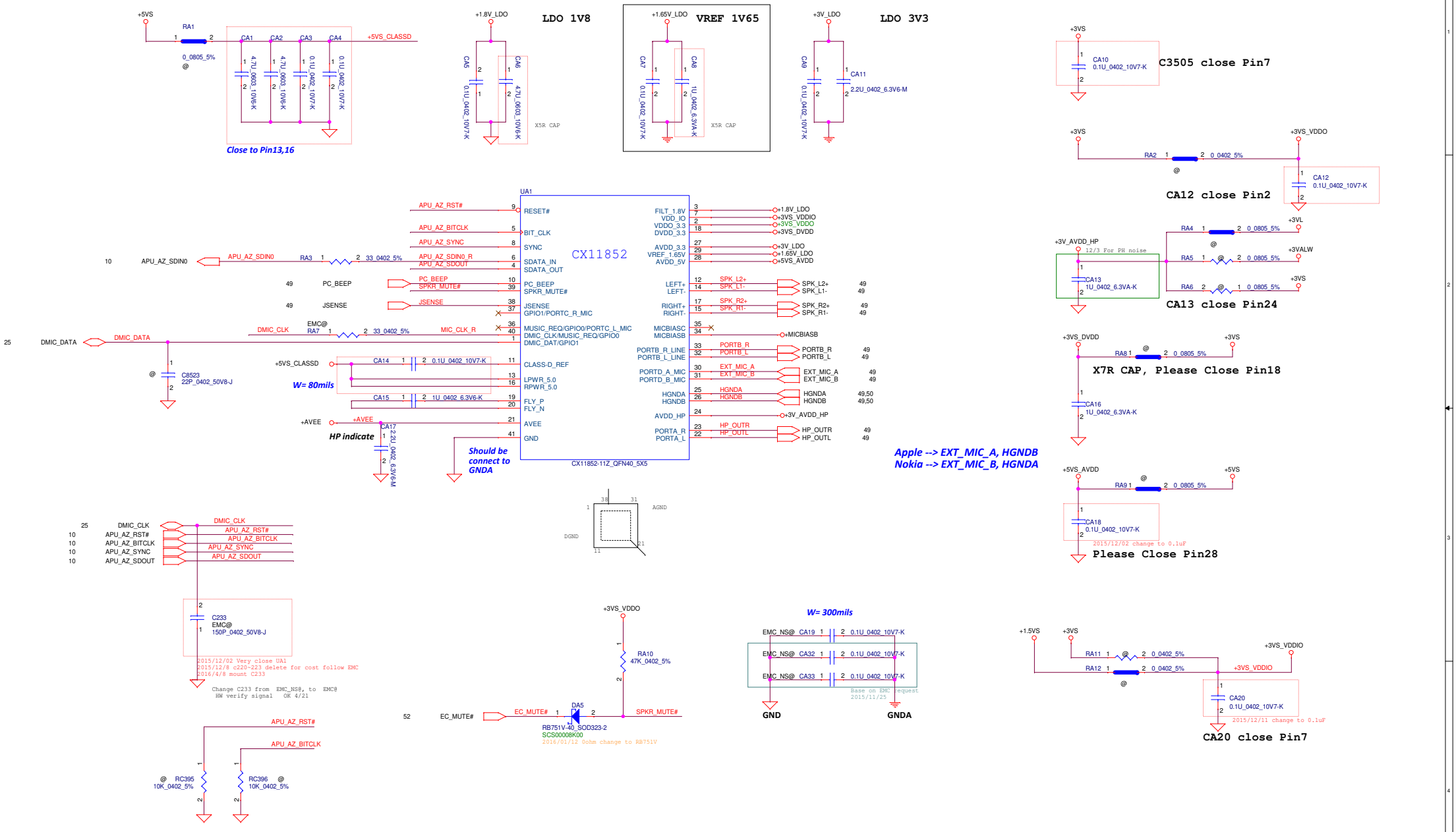

Security Classification	LC Future Center Secret Data		
Issued Date	2015/10/5	Deciphered Date	2016/12/31

THIS SHEET OF ENGINEERING DRAWING IS THE PROPRIETARY PROPERTY OF LC FUTURE CENTER, AND CONTAINS CONFIDENTIAL AND TRADE SECRET INFORMATION. THIS SHEET MAY NOT BE TRANSFERRED FROM THE CUSTODY OF THE COMPETENT DIVISION OF R&D DEPARTMENT EXCEPT AS AUTHORIZED BY LC FUTURE CENTER NEITHER THIS SHEET NOR THE INFORMATION IT CONTAINS MAY BE USED BY OR DISCLOSED TO ANY THIRD PARTY WITHOUT PRIOR WRITTEN CONSENT OF LC FUTURE CENTER.

Title: **Audio Codec**

Size: Custom | Document Number: NM-A861 | Rev: 1.0

Date: Monday, August 01, 2016 | Sheet 48 of 80

PC Beep

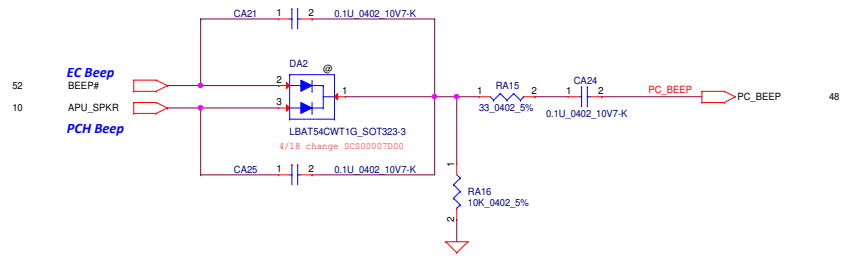

EXT. MIC/LINE IN

Apple --> EXT_MIC_A, HGNDB
Nokia --> EXT_MIC_B, HGNDA

Changed CA29 & CA30 from 1uF to 2.2uF/X5R to meet Port-D(headset-Mic) THD+N <= -65 dB

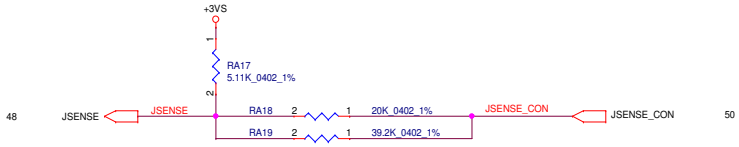

HeadPhone/LINE OUT

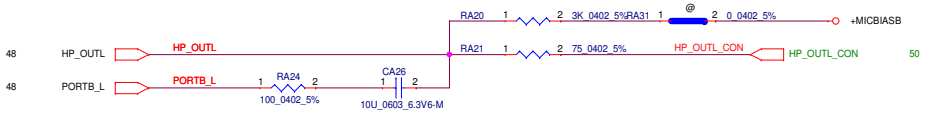

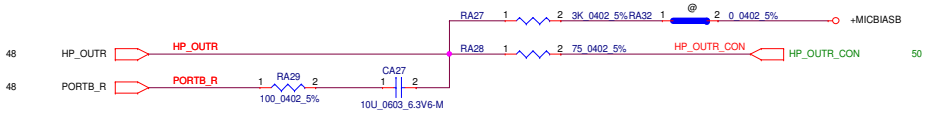

CA31, CA32 change to 4.7U for Quality requirement

Speaker OUT

Need Lenght Match

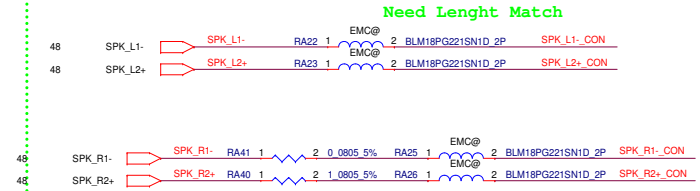

16/4/8 change RA40, RA41 to 1ohm, 0ohm for speaker gain blance fine tune.

Change RA40 to SD00001XY0T 4/25

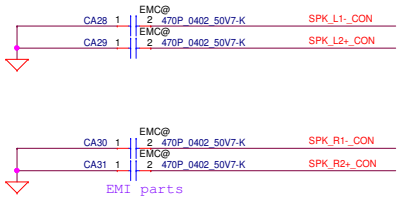

SPK CONN.

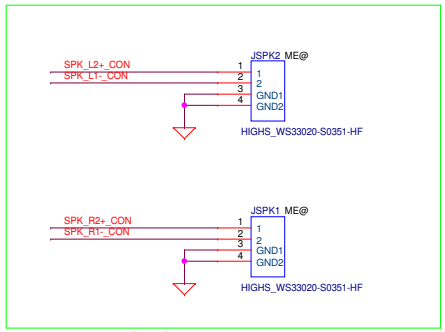

2015/11/13 check pin1, 2 again!!

Security Classification	LC Future Center Secret Data		
Issued Date	2015/10/5	Deciphered Date	2016/12/31

THIS SHEET OF ENGINEERING DRAWING IS THE PROPRIETARY PROPERTY OF LC FUTURE CENTER, AND CONTAINS CONFIDENTIAL AND TRADE SECRET INFORMATION. THIS SHEET MAY NOT BE TRANSFERED FROM THE CUSTODY OF THE COMPETENT DIVISION OF R&D DEPARTMENT EXCEPT AS AUTHORIZED BY LC FUTURE CENTER NEITHER THIS SHEET NOR THE INFORMATION IT CONTAINS MAY BE USED BY OR DISCLOSED TO ANY THIRD PARTY WITHOUT PRIOR WRITTEN CONSENT OF LC FUTURE CENTER.

Title: **HP/MIC JACK/Speaker**

Size: Custom | Document Number: NM-A861 | Rev: 1.0

Date: Monday, August 01, 2016 | Sheet 49 of 80

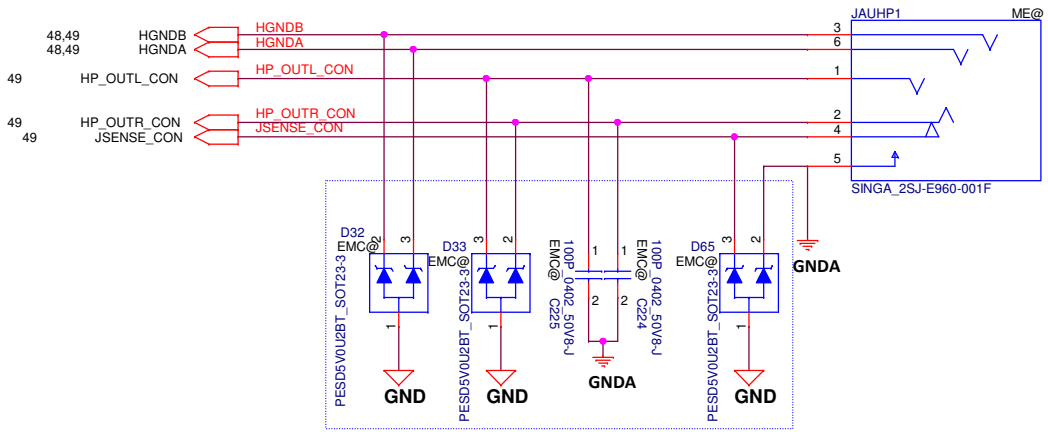

Vendor suggestion.
Reserve for EMI.
Close to JAUHP.

Security Classification	LC Future Center Secret Data		
Issued Date	2015/10/5	Deciphered Date	2016/12/31

THIS SHEET OF ENGINEERING DRAWING IS THE PROPRIETARY PROPERTY OF LC FUTURE CENTER. AND CONTAINS CONFIDENTIAL AND TRADE SECRET INFORMATION. THIS SHEET MAY NOT BE TRANSFERED FROM THE CUSTODY OF THE COMPETENT DIVISION OF R&D DEPARTMENT EXCEPT AS AUTHORIZED BY LC FUTURE CENTER NEITHER THIS SHEET NOR THE INFORMATION IT CONTAINS MAY BE USED BY OR DISCLOSED TO ANY THIRD PARTY WITHOUT PRIOR WRITTEN CONSENT OF LC FUTURE CENTER.

Title
AUDIO JACK

Size	Document Number	Rev
B	NM-A861	1.0

Date: Monday, August 01, 2016 Sheet 50 of 80

BLANK

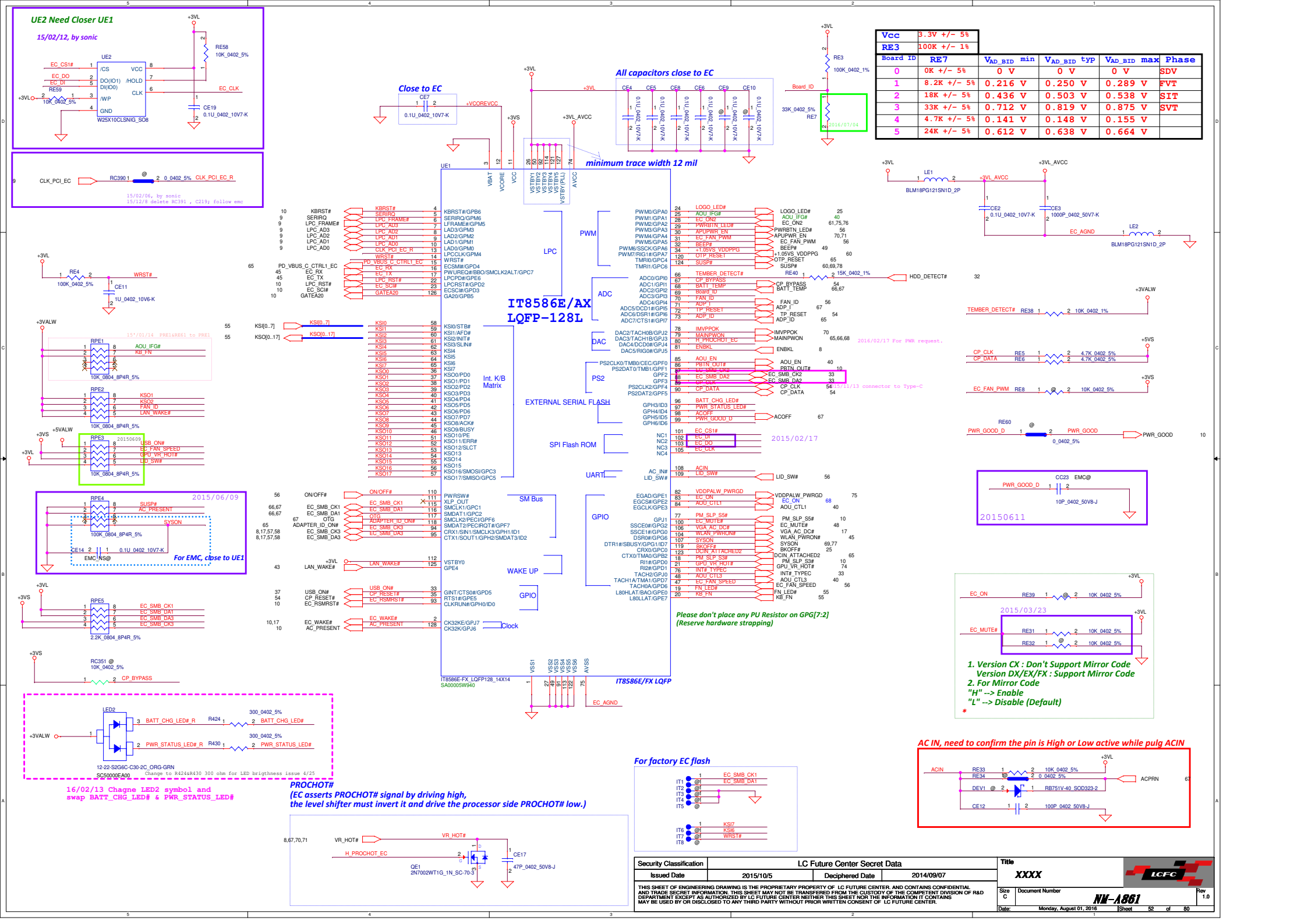

Vcc	3.3V +/- 5%
RE3	100K +/- 1%

Board ID	RE7	V_{AD_BID} min	V_{AD_BID} typ	V_{AD_BID} max	Phase
0	0K +/- 5%	0 V	0 V	0 V	SDV
1	8.2K +/- 5%	0.216 V	0.250 V	0.289 V	FVT
2	18K +/- 5%	0.436 V	0.503 V	0.538 V	SIT
3	33K +/- 5%	0.712 V	0.819 V	0.875 V	SVT
4	4.7K +/- 5%	0.141 V	0.148 V	0.155 V	
5	24K +/- 5%	0.612 V	0.638 V	0.664 V	

TPM IC

Only for UMA SKU

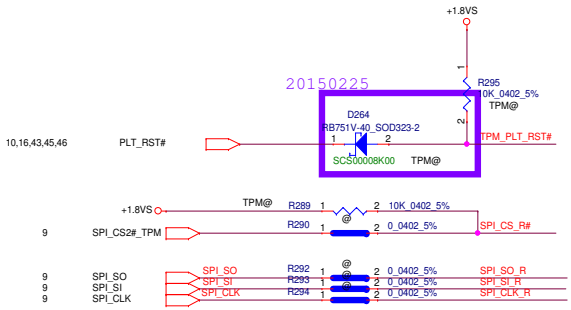

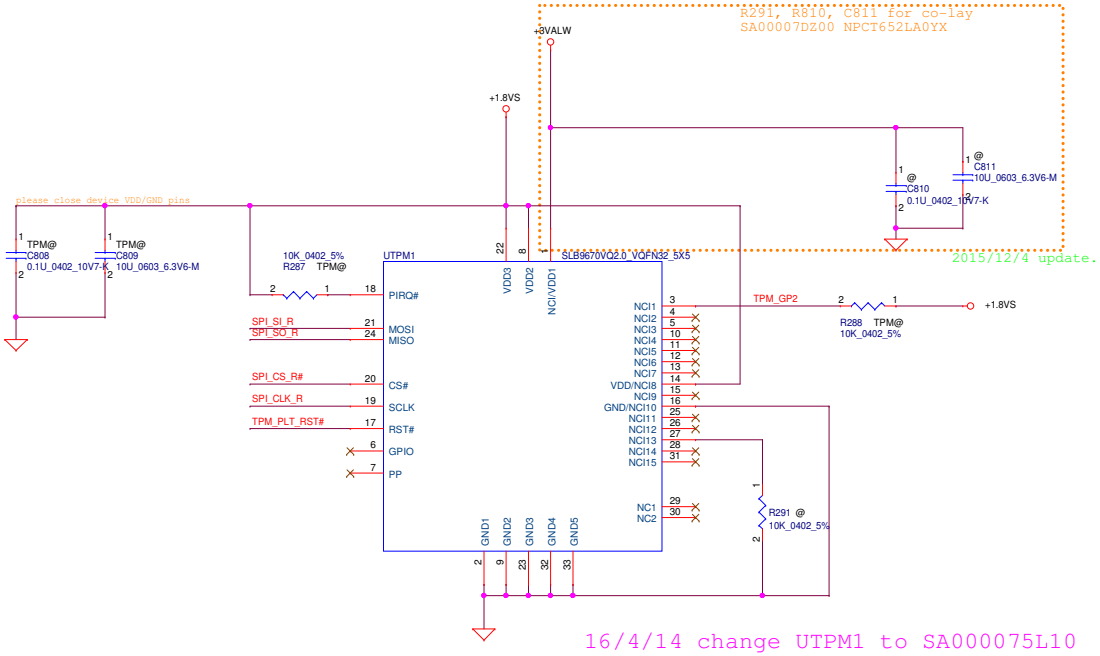

NOTE:
Check timing sequence in SDV phase.

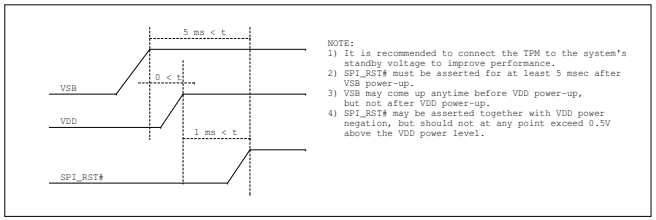

Security Classification	LC Future Center Secret Data		
Issued Date	2015/10/5	Deciphered Date	2016/12/31

THIS SHEET OF ENGINEERING DRAWING IS THE PROPRIETARY PROPERTY OF LC FUTURE CENTER, AND CONTAINS CONFIDENTIAL AND TRADE SECRET INFORMATION. THIS SHEET MAY NOT BE TRANSFERED FROM THE CUSTODY OF THE COMPETENT DIVISION OF R&D DEPARTMENT EXCEPT AS AUTHORIZED BY LC FUTURE CENTER NEITHER THIS SHEET NOR THE INFORMATION IT CONTAINS MAY BE USED BY OR DISCLOSED TO ANY THIRD PARTY WITHOUT PRIOR WRITTEN CONSENT OF LC FUTURE CENTER.

Title: TPM

Size: Custom | Document Number: NM-A861 | Rev: 1.0

Date: Monday, August 01, 2016 | Sheet 53 of 80

Click Pad

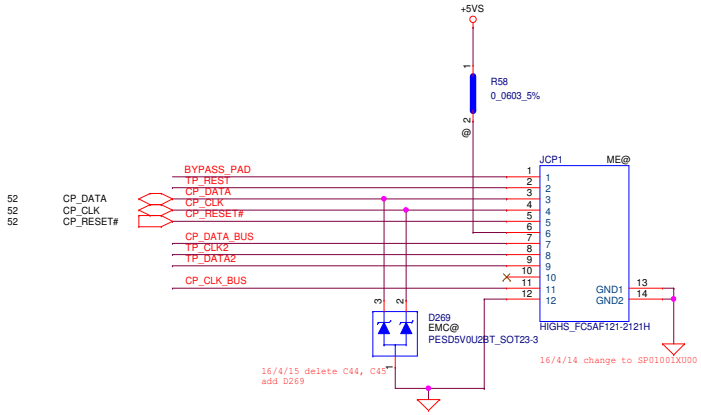

Track point

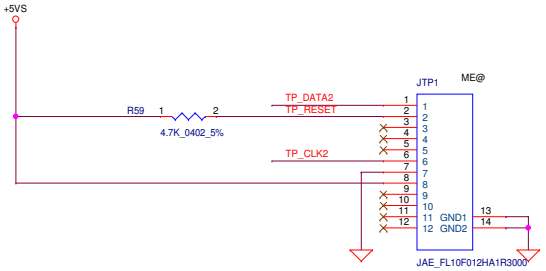

Security Classification	LC Future Center Secret Data		
Issued Date	2015/10/5	Deciphered Date	2016/12/31

THIS SHEET OF ENGINEERING DRAWING IS THE PROPRIETARY PROPERTY OF LC FUTURE CENTER, AND CONTAINS CONFIDENTIAL AND TRADE SECRET INFORMATION. THIS SHEET MAY NOT BE TRANSFERED FROM THE CUSTODY OF THE COMPETENT DIVISION OF R&D DEPARTMENT EXCEPT AS AUTHORIZED BY LC FUTURE CENTER NEITHER THIS SHEET NOR THE INFORMATION IT CONTAINS MAY BE USED BY OR DISCLOSED TO ANY THIRD PARTY WITHOUT PRIOR WRITTEN CONSENT OF LC FUTURE CENTER.

Title: CP/TPOINTCONN.

Size: Custom | Document Number: NM-A861 | Rev: 1.0

Date: Monday, August 01, 2016 | Sheet 54 of 80

KB CONN

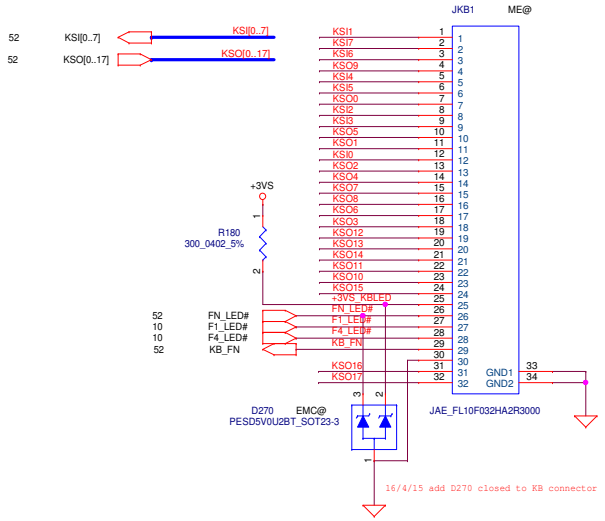

Security Classification	LC Future Center Secret Data		
Issued Date	2015/10/5	Deciphered Date	2016/12/31

THIS SHEET OF ENGINEERING DRAWING IS THE PROPRIETARY PROPERTY OF LC FUTURE CENTER, AND CONTAINS CONFIDENTIAL AND TRADE SECRET INFORMATION. THIS SHEET MAY NOT BE TRANSFERED FROM THE CUSTODY OF THE COMPETENT DIVISION OF R&D DEPARTMENT EXCEPT AS AUTHORIZED BY LC FUTURE CENTER NEITHER THIS SHEET NOR THE INFORMATION IT CONTAINS MAY BE USED BY OR DISCLOSED TO ANY THIRD PARTY WITHOUT PRIOR WRITTEN CONSENT OF LC FUTURE CENTER.

Title: KB/RTC/TOUCH PAN CONN.

Size: Custom | Document Number: NM-A861 | Rev: 1.0

Date: Monday, August 01, 2016 | Sheet 55 of 80

FAN CONN.

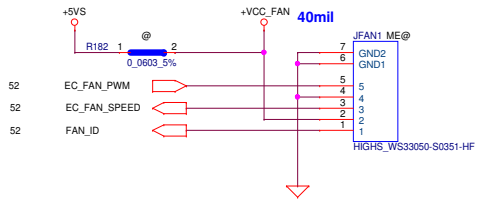

PWR BTN

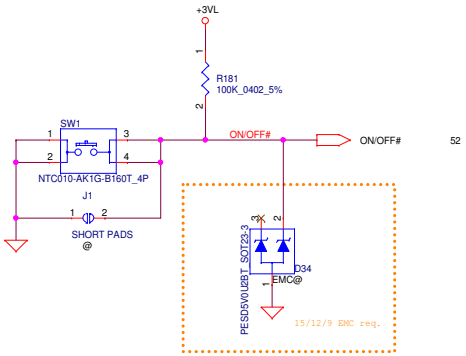

LED

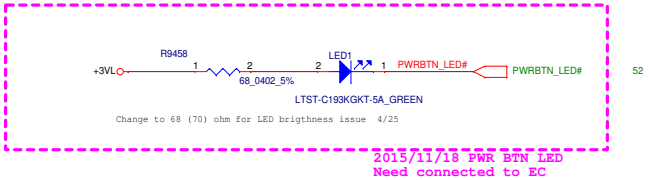

FingerPrint CONN.

15/12/18 delete finger printer function
make all FRP circuit to "@" and will be delete at next version.

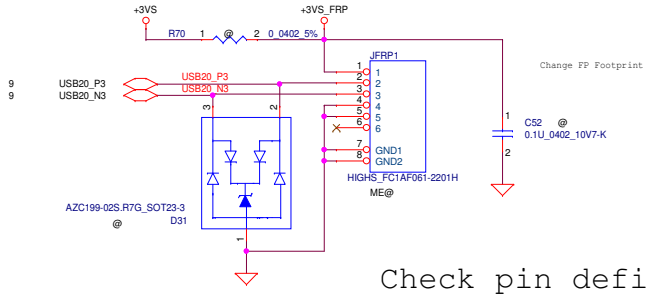

Check pin define.

Lid Switch

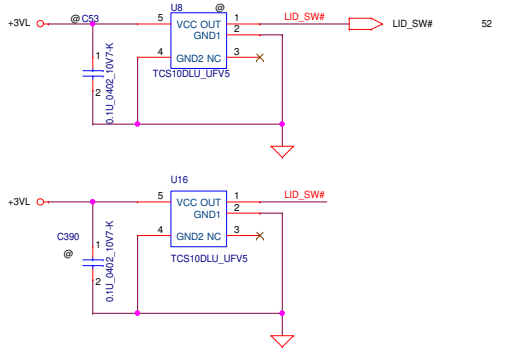

16/02/13
1. Co-lay U16 & U18
2. Co-lay U8 & U19

Security Classification	LC Future Center Secret Data		
Issued Date	2015/10/5	Deciphered Date	2016/12/31

THIS SHEET OF ENGINEERING DRAWING IS THE PROPRIETARY PROPERTY OF LC FUTURE CENTER, AND CONTAINS CONFIDENTIAL AND TRADE SECRET INFORMATION. THIS SHEET MAY NOT BE TRANSFERED FROM THE CUSTODY OF THE COMPETENT DIVISION OF R&D DEPARTMENT EXCEPT AS AUTHORIZED BY LC FUTURE CENTER NEITHER THIS SHEET NOR THE INFORMATION IT CONTAINS MAY BE USED BY OR DISCLOSED TO ANY THIRD PARTY WITHOUT PRIOR WRITTEN CONSENT OF LC FUTURE CENTER.

Title: PBTN/LID/FP/FAN CONN.

Size: Custom | Document Number: NM-A861 | Rev: 1.0

Date: Monday, August 01, 2016 | Sheet 56 of 80

Thermal Sensor placed near by VRAM

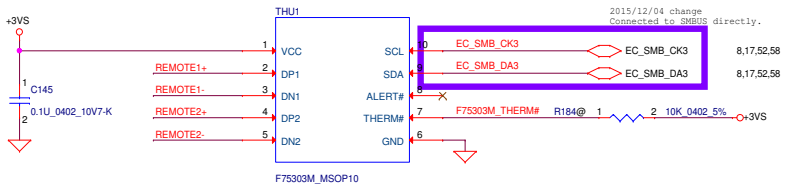

Address 1001_101xb

Internal pull up 1.2K to 1.5V
R for initial thermal shutdown temp

Close to U1

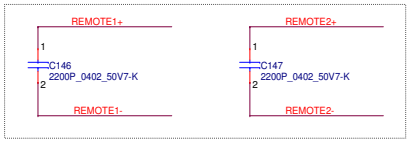

Close to +VCC_CORE

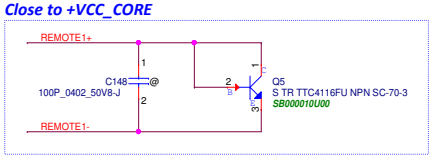

Close JDIMM1&JDIMM2

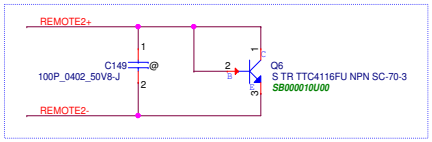

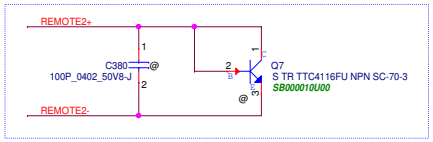

REMOTE2+/-:
Trace width/space:10/10 mil
Trace length:<8"

Security Classification	LC Future Center Secret Data		
Issued Date	2015/10/5	Deciphered Date	2016/12/31

THIS SHEET OF ENGINEERING DRAWING IS THE PROPRIETARY PROPERTY OF LC FUTURE CENTER. AND CONTAINS CONFIDENTIAL AND TRADE SECRET INFORMATION. THIS SHEET MAY NOT BE TRANSFERED FROM THE CUSTODY OF THE COMPETENT DIVISION OF R&D DEPARTMENT EXCEPT AS AUTHORIZED BY LC FUTURE CENTER NEITHER THIS SHEET NOR THE INFORMATION IT CONTAINS MAY BE USED BY OR DISCLOSED TO ANY THIRD PARTY WITHOUT PRIOR WRITTEN CONSENT OF LC FUTURE CENTER.

Title: ***Thermal Sensor***

Size: Custom | Document Number: NM-A861 | Rev: 1.0

Date: Monday, August 01, 2016 | Sheet 57 of 80

APS G-Sensor

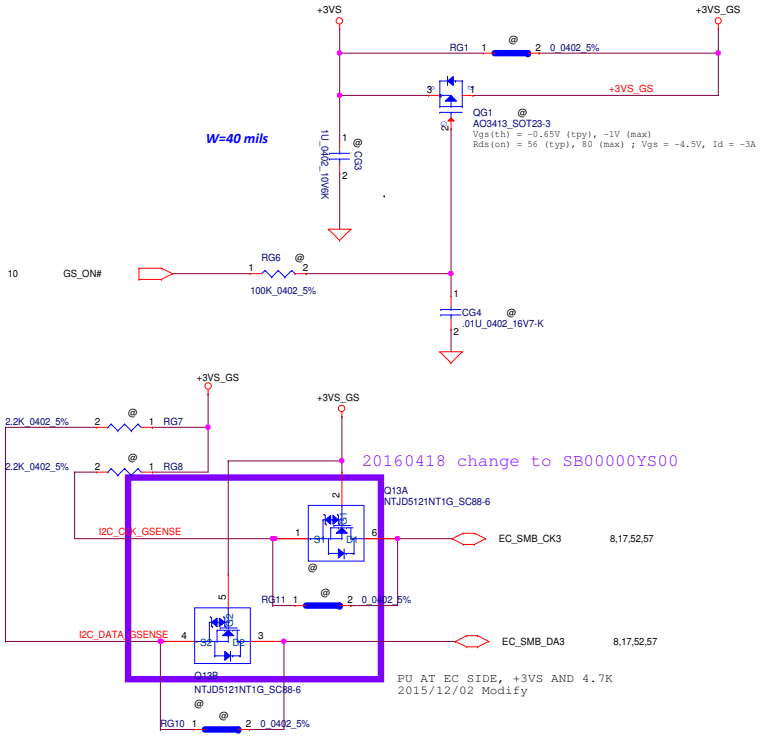

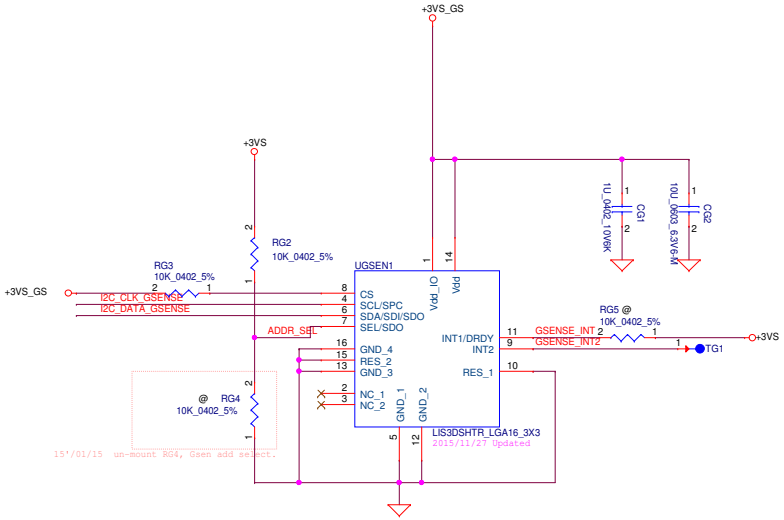

TABLE

P/N	ADDR_SEL	Address
LIS3DH	H L	32h (W) & 33h (R) 30h (W) & 31h (R)
KX023-1025	H L	3Eh (W) & 3Fh (R) 3Ch (W) & 3Dh (R)

TABLE

P/N	Mode Selection
H	I2C Mode
L	SPI Mode

Security Classification	LC Future Center Secret Data		
Issued Date	2015/10/5	Deciphered Date	2016/12/31

THIS SHEET OF ENGINEERING DRAWING IS THE PROPRIETARY PROPERTY OF LC FUTURE CENTER, AND CONTAINS CONFIDENTIAL AND TRADE SECRET INFORMATION. THIS SHEET MAY NOT BE TRANSFERED FROM THE CUSTODY OF THE COMPETENT DIVISION OF R&D DEPARTMENT EXCEPT AS AUTHORIZED BY LC FUTURE CENTER NEITHER THIS SHEET NOR THE INFORMATION IT CONTAINS MAY BE USED BY OR DISCLOSED TO ANY THIRD PARTY WITHOUT PRIOR WRITTEN CONSENT OF LC FUTURE CENTER.

Title: G SENSOR

Size: Custom | Document Number: NM-A861 | Rev: 1.0

Date: Monday, August 01, 2016 | Sheet 58 of 80

Security Classification	LC Future Center Secret Data		
Issued Date	2015/10/5	Deciphered Date	2014/09/07

THIS SHEET OF ENGINEERING DRAWING IS THE PROPRIETARY PROPERTY OF LC FUTURE CENTER. AND CONTAINS CONFIDENTIAL AND TRADE SECRET INFORMATION. THIS SHEET MAY NOT BE TRANSFERED FROM THE CUSTODY OF THE COMPETENT DIVISION OF R&D DEPARTMENT EXCEPT AS AUTHORIZED BY LC FUTURE CENTER NEITHER THIS SHEET NOR THE INFORMATION IT CONTAINS MAY BE USED BY OR DISCLOSED TO ANY THIRD PARTY WITHOUT PRIOR WRITTEN CONSENT OF LC FUTURE CENTER.

Title

XXXX

Size	Document Number	Rev
B	NM-A861	1.0

Date: Monday, August 01, 2016

+5VALW To +5VS
+3VALW To +3VS

VIN 5V and 3.3V (VBIAS=5V), IMAX(per channel)=6A, Rds=18mohm

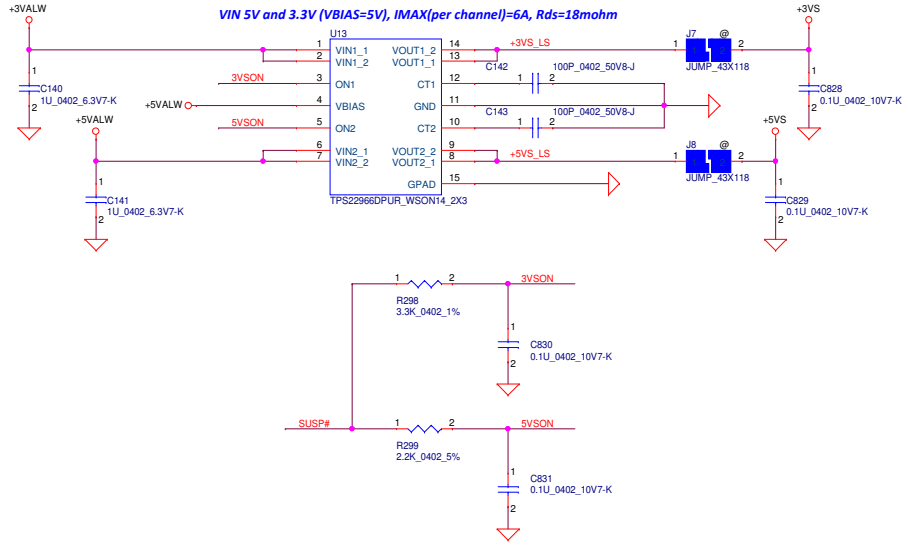

For DisCharge

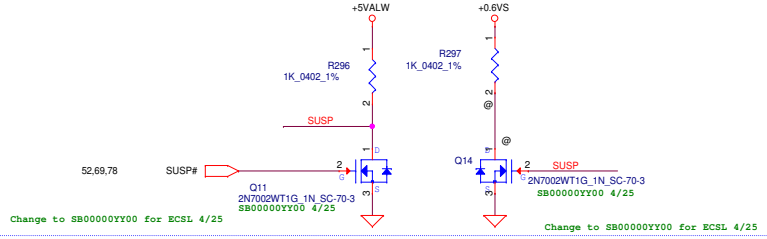

+1.8VALW to +1.8VS 2A request

VIN 1.8V (VBIAS=5V), IMAX=6A, Rds=15mohm

Vgs(th) = -0.65V (typ), -1V (max)
Rds(on) = 56 (typ), 80 (max) ; Vgs = -4.5V, Id = -3A

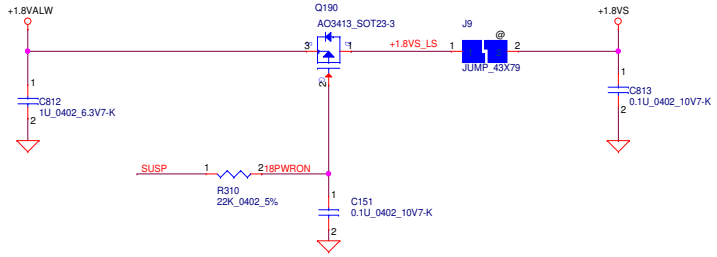

+1.05VALW_VDDP to +VDDP 10A request

VIN 1.05V (VBIAS=5V), IMAX=10A, Rds=7mohm

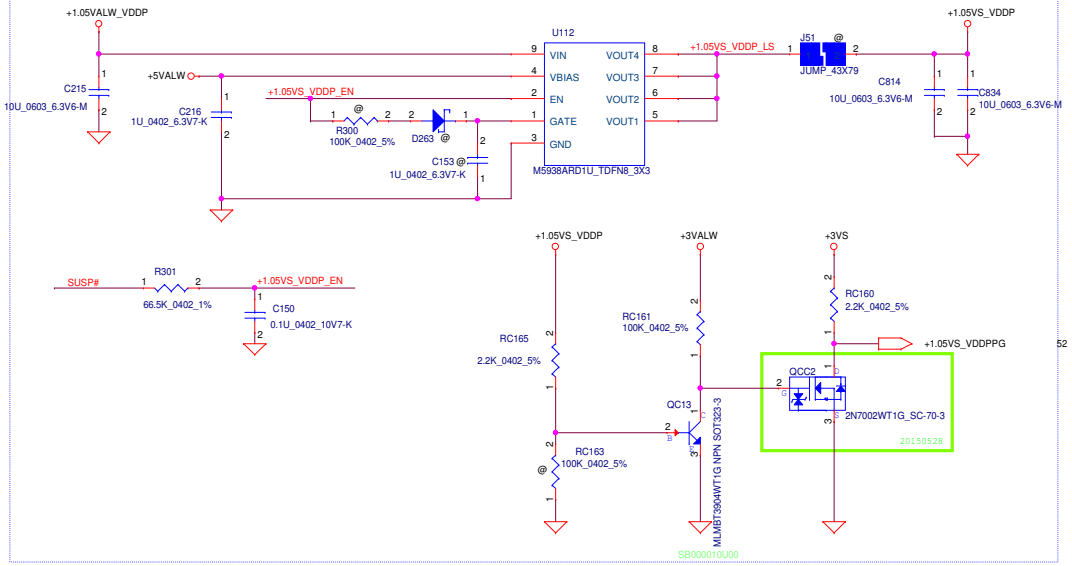

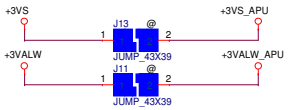

Security Classification	LC Future Center Secret Data		
Issued Date	2015/10/5	Deciphered Date	2014/07/01

THIS SHEET OF ENGINEERING DRAWING IS THE PROPRIETARY PROPERTY OF LC FUTURE CENTER. AND CONTAINS CONFIDENTIAL AND TRADE SECRET INFORMATION. THIS SHEET MAY NOT BE TRANSFERED FROM THE CUSTODY OF THE COMPETENT DIVISION OF R&D DEPARTMENT EXCEPT AS AUTHORIZED BY LC FUTURE CENTER NEITHER THIS SHEET NOR THE INFORMATION IT CONTAINS MAY BE USED BY OR DISCLOSED TO ANY THIRD PARTY WITHOUT PRIOR WRITTEN CONSENT OF LC FUTURE CENTER.

Title: 3VS/5VS/1.1VS/VDDIO_RUN

Size: Custom | Document Number: NM-A861 | Rev: 1.0

Date: Monday, August 01, 2016 | Sheet 60 of 80

+VDDCR_FCH_ALW

During S0: track +VDDNB_CORE
During S5/S4/S3: set to +0.775V

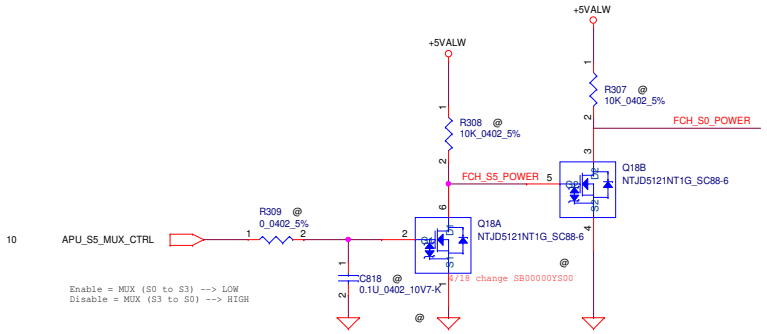

+RTC_LDO

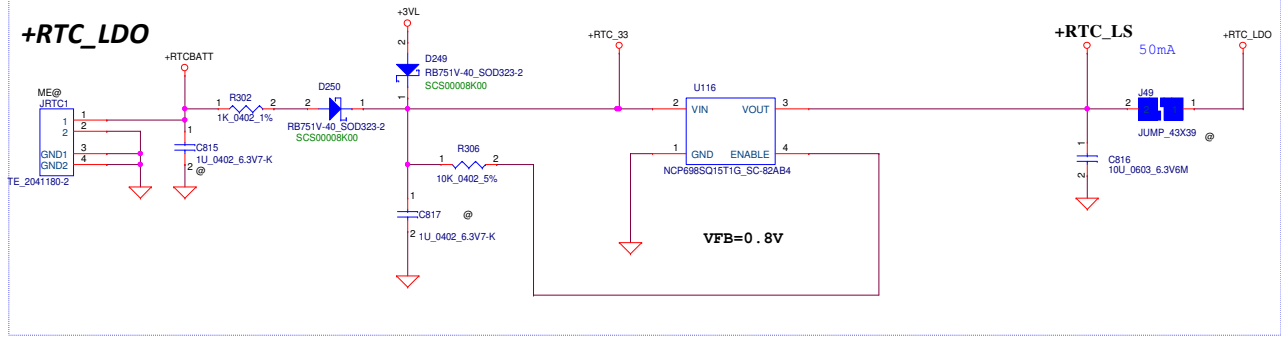

+0.775VALW

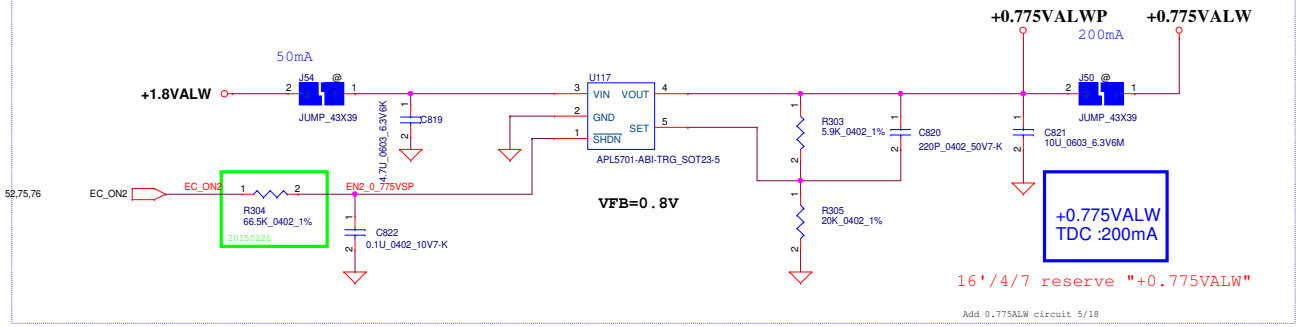

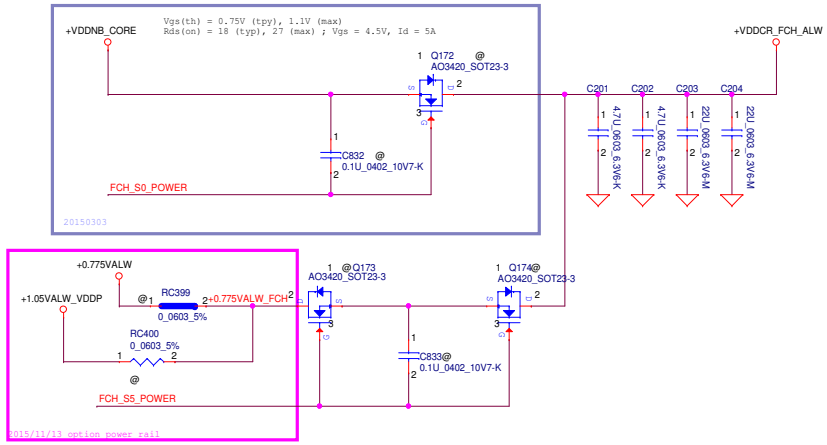

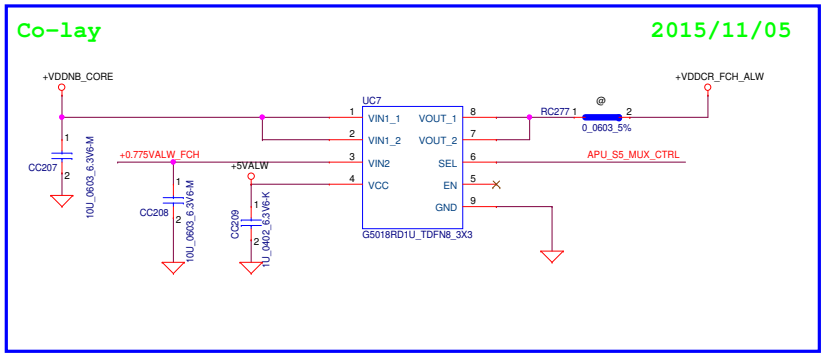

Security Classification	LC Future Center Secret Data		
Issued Date	2015/10/5	Deciphered Date	2014/07/01

THIS SHEET OF ENGINEERING DRAWING IS THE PROPRIETARY PROPERTY OF LC FUTURE CENTER, AND CONTAINS CONFIDENTIAL AND TRADE SECRET INFORMATION. THIS SHEET MAY NOT BE TRANSFERED FROM THE CUSTODY OF THE COMPETENT DIVISION OF R&D DEPARTMENT EXCEPT AS AUTHORIZED BY LC FUTURE CENTER NEITHER THIS SHEET NOR THE INFORMATION IT CONTAINS MAY BE USED BY OR DISCLOSED TO ANY THIRD PARTY WITHOUT PRIOR WRITTEN CONSENT OF LC FUTURE CENTER.

Title: 3VS/5VS/1.1VS/VDDIO_RUN

Size: Custom | Document Number: NM-A861 | Rev: 1.0

Date: Monday, August 01, 2016 | Sheet 61 of 80

Security Classification	LC Future Center Secret Data		
Issued Date	2015/10/5	Deciphered Date	2014/09/07

THIS SHEET OF ENGINEERING DRAWING IS THE PROPRIETARY PROPERTY OF LC FUTURE CENTER. AND CONTAINS CONFIDENTIAL AND TRADE SECRET INFORMATION. THIS SHEET MAY NOT BE TRANSFERED FROM THE CUSTODY OF THE COMPETENT DIVISION OF R&D DEPARTMENT EXCEPT AS AUTHORIZED BY LC FUTURE CENTER NEITHER THIS SHEET NOR THE INFORMATION IT CONTAINS MAY BE USED BY OR DISCLOSED TO ANY THIRD PARTY WITHOUT PRIOR WRITTEN CONSENT OF LC FUTURE CENTER.

Title	XXXX	
Size B	Document Number	Rev 1.0
	NM-A861	
Date:	Monday, August 01, 2016	Sheet 62 of 80

Screw Hole

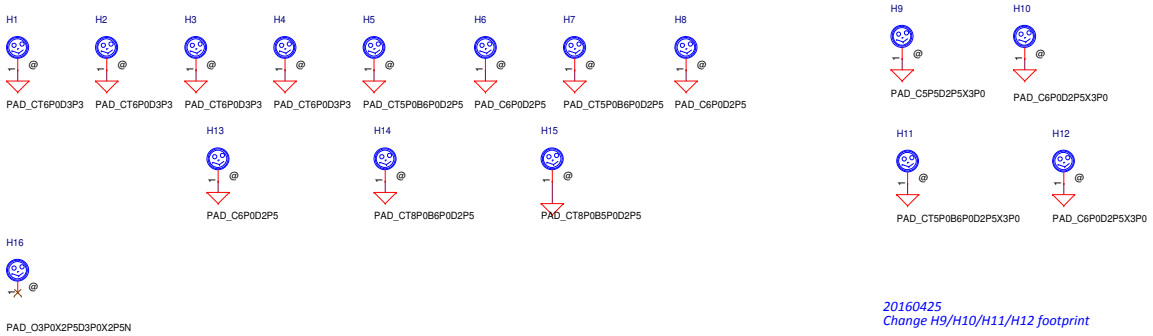

20160425
Change H9/H10/H11/H12 footprint

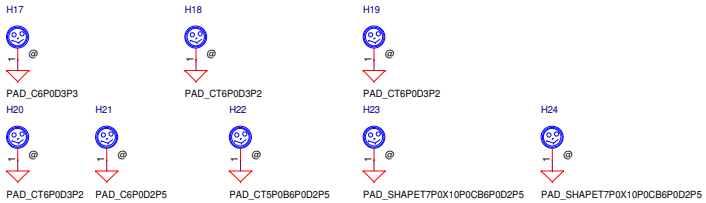

Center Zero

PCB Fedical Mark PAD

Security Classification	LC Future Center Secret Data		
Issued Date	2015/10/5	Deciphered Date	2016/12/31

THIS SHEET OF ENGINEERING DRAWING IS THE PROPRIETARY PROPERTY OF LC FUTURE CENTER, AND CONTAINS CONFIDENTIAL AND TRADE SECRET INFORMATION. THIS SHEET MAY NOT BE TRANSFERED FROM THE CUSTODY OF THE COMPETENT DIVISION OF R&D DEPARTMENT EXCEPT AS AUTHORIZED BY LC FUTURE CENTER NEITHER THIS SHEET NOR THE INFORMATION IT CONTAINS MAY BE USED BY OR DISCLOSED TO ANY THIRD PARTY WITHOUT PRIOR WRITTEN CONSENT OF LC FUTURE CENTER.

Title: XXXX

Size: Custom | Document Number: NM-A861 | Rev: 1.0

Date: Monday, August 01, 2016 | Sheet 63 of 80

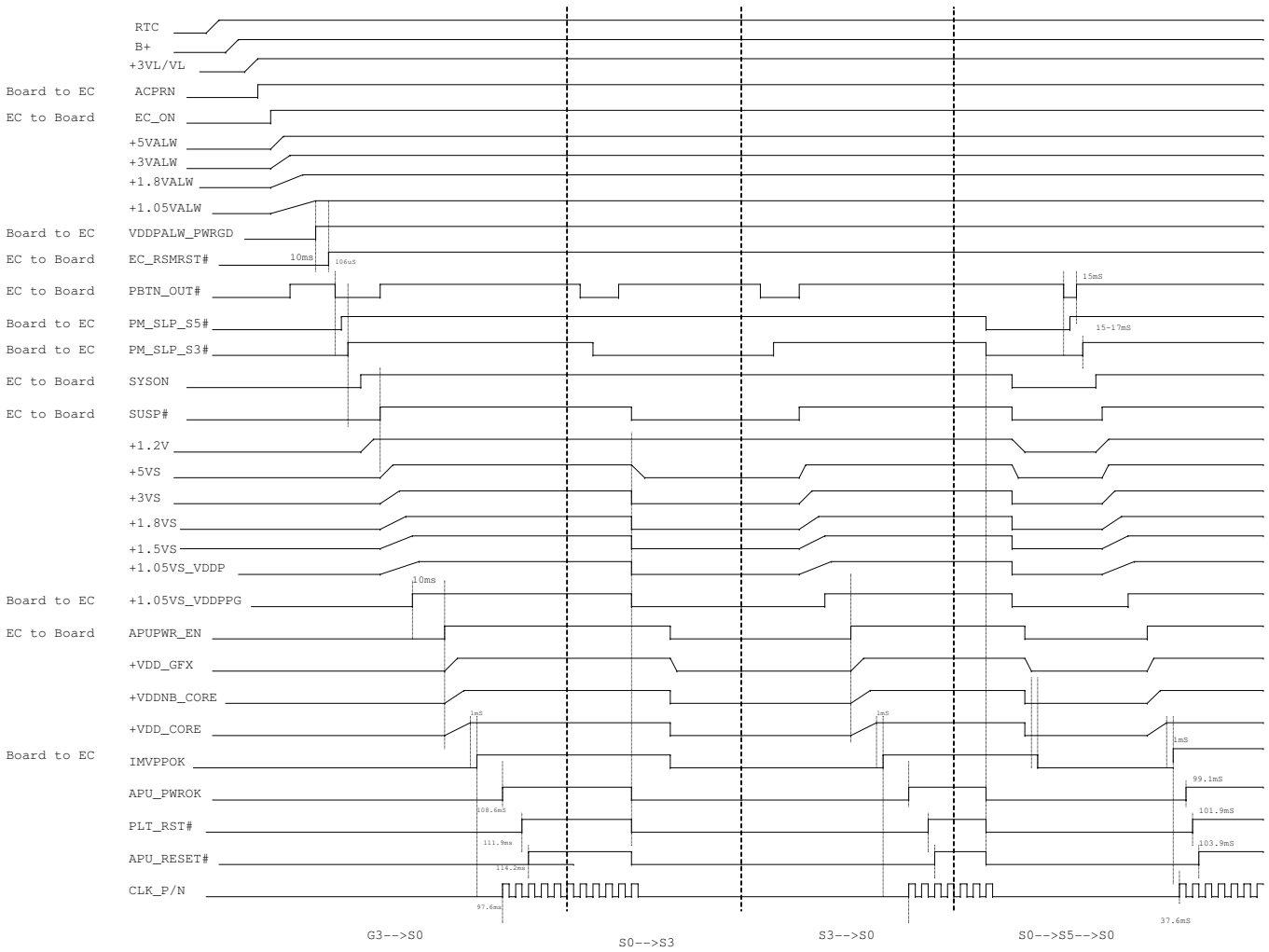

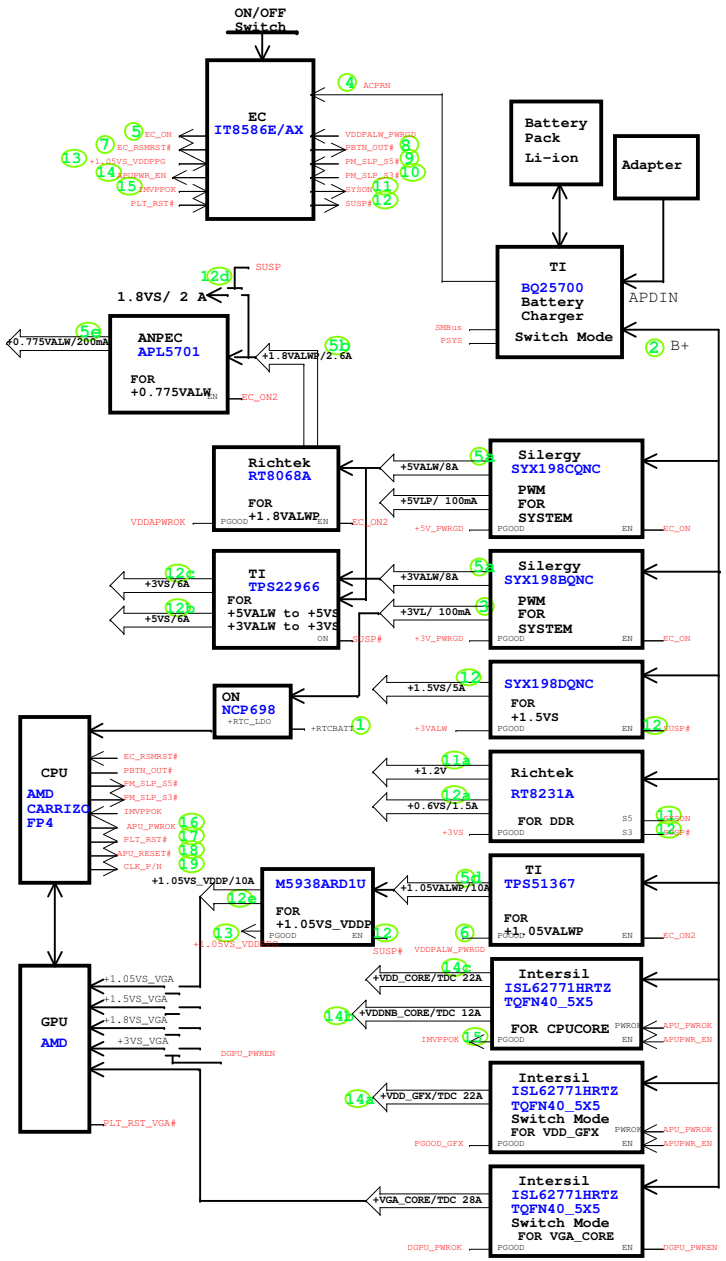

Security Classification	LC Future Center Secret Data		Title
Issued Date 2015/10/5	Deciphered Date 2014/07/01		Power Sequence
THIS SHEET OF ENGINEERING DRAWING IS THE PROPRIETARY PROPERTY OF LC FUTURE CENTER, AND CONTAINS CONFIDENTIAL AND TRADE SECRET INFORMATION. THIS SHEET MAY NOT BE TRANSFERRED FROM THE CUSTODY OF THE COMPETENT DIVISION OF R&D DEPARTMENT EXCEPT AS AUTHORIZED BY LC FUTURE CENTER NEITHER THIS SHEET NOR THE INFORMATION IT CONTAINS MAY BE USED BY OR DISCLOSED TO ANY THIRD PARTY WITHOUT PRIOR WRITTEN CONSENT OF LC FUTURE CENTER.			Size D · Document Number NM-A861 · Rev 1.0
			Date: Monday, August 31, 2015 · Sheet 64 of 89

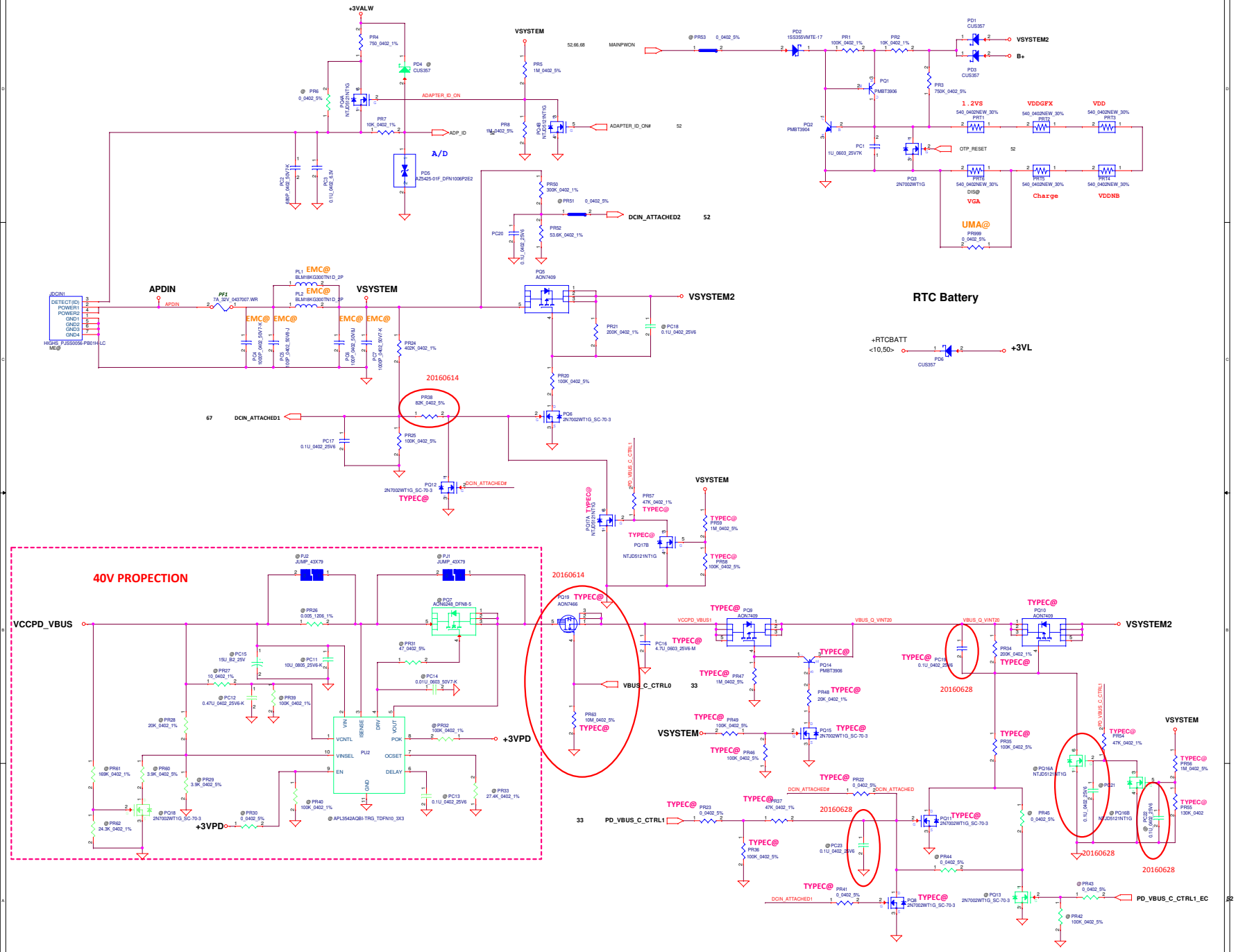

Security Classification	LC Future Center Secret Data		
Issued Date	2013/08/05	Deciphered Date	2014/12/31

THIS SHEET OF ENGINEERING DRAWING IS THE PROPRIETARY PROPERTY OF LC FUTURE CENTER, AND CONTAINS CONFIDENTIAL AND TRADE SECRET INFORMATION. THIS SHEET MAY NOT BE TRANSFERRED FROM THE CUSTODY OF THE COMPETENT DIVISION OF R&D DEPARTMENT EXCEPT AS AUTHORIZED BY LC FUTURE CENTER NEITHER THIS SHEET NOR THE INFORMATION IT CONTAINS MAY BE USED BY OR DISCLOSED TO ANY THIRD PARTY WITHOUT PRIOR WRITTEN CONSENT OF LC FUTURE CENTER.

Title: DCIN / VIN Detector

Size: Custom | Document Number: NM-A861 | Rev: 1.0

Date: Monday, August 01, 2016 | Sheet 65 of 80

PRT7 under CPU botten side :
CPU thermal protection at 93 +-3 degree C
Recovery at 56 +-3 degree C

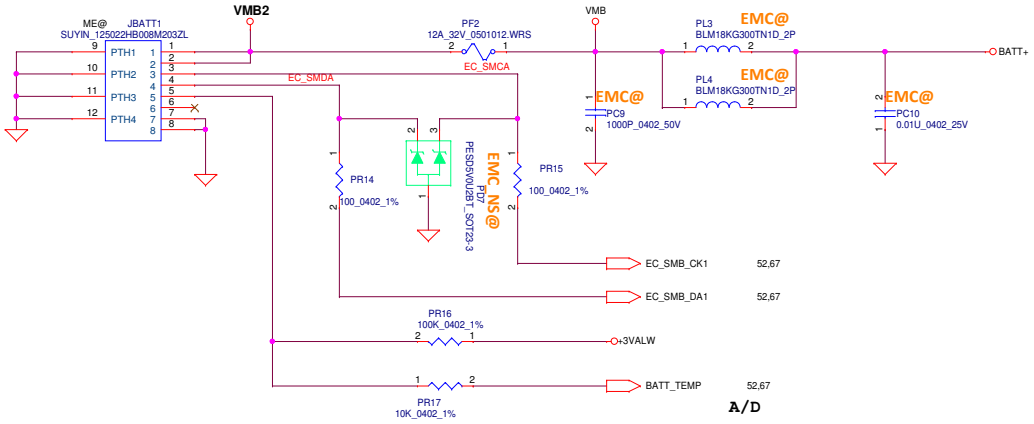

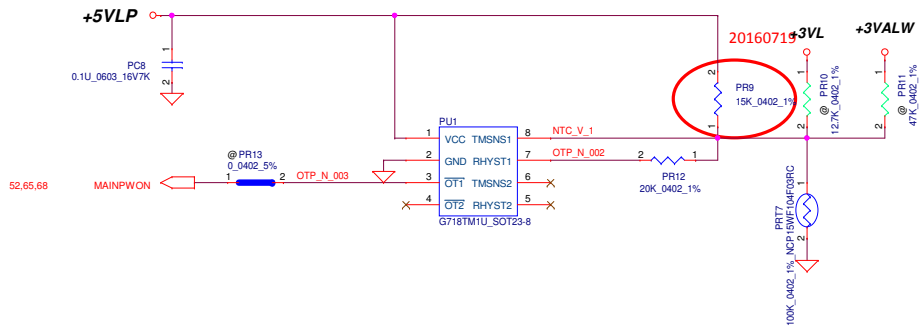

<Variant Name>

Security Classification	LC Future Center Secret Data		
Issued Date	2013/08/05	Deciphered Date	2014/12/31

THIS SHEET OF ENGINEERING DRAWING IS THE PROPRIETARY PROPERTY OF LC FUTURE CENTER. AND CONTAINS CONFIDENTIAL AND TRADE SECRET INFORMATION. THIS SHEET MAY NOT BE TRANSFERED FROM THE CUSTODY OF THE COMPETENT DIVISION OF R&D DEPARTMENT EXCEPT AS AUTHORIZED BY LC FUTURE CENTER NEITHER THIS SHEET NOR THE INFORMATION IT CONTAINS MAY BE USED BY OR DISCLOSED TO ANY THIRD PARTY WITHOUT PRIOR WRITTEN CONSENT OF LC FUTURE CENTER.

Title
BATTERY CONN/PH1

Size: Custom
Document Number: NM-A861
Rev: 1.0

Date: Monday, August 01, 2016
Sheet 66 of 80

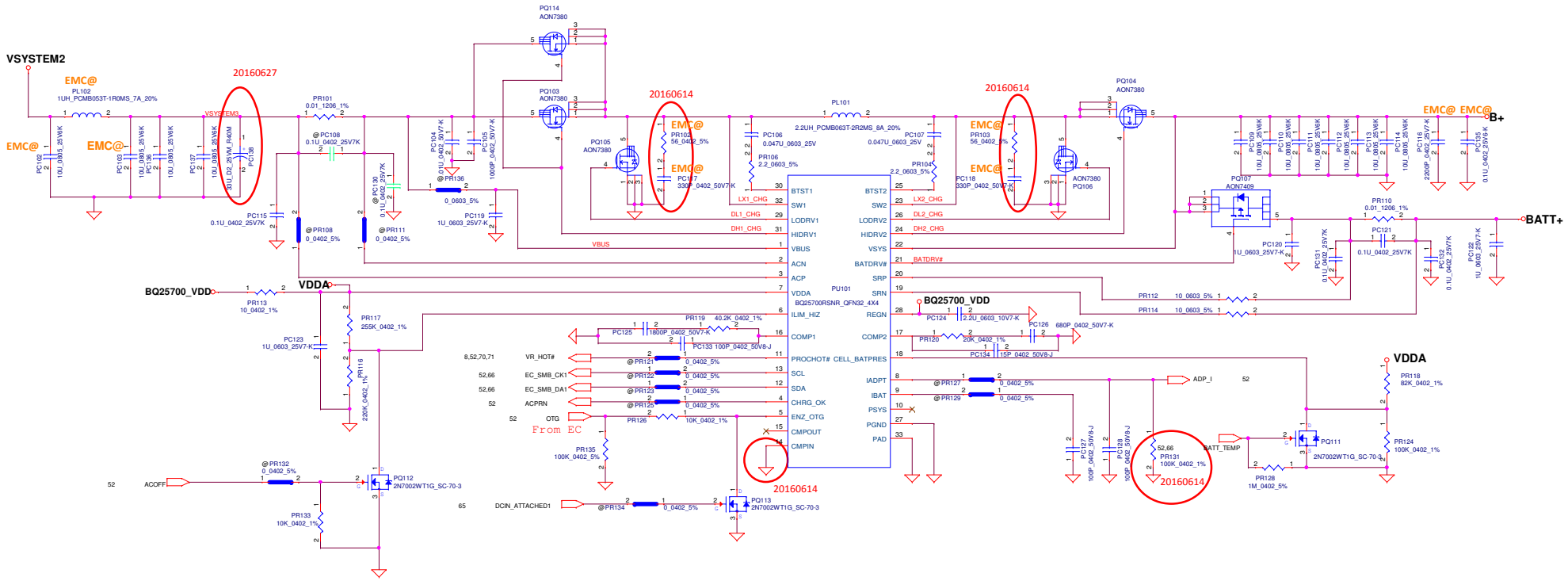

<Variant Name>

Security Classification	LC Future Center Secret Data		
Issued Date	2013/08/05	Deciphered Date	2014/12/31

THIS SHEET OF ENGINEERING DRAWING IS THE PROPRIETARY PROPERTY OF LC FUTURE CENTER, AND CONTAINS CONFIDENTIAL AND TRADE SECRET INFORMATION. THIS SHEET MAY NOT BE TRANSFERED FROM THE CUSTODY OF THE COMPETENT DIVISION OF R&D DEPARTMENT EXCEPT AS AUTHORIZED BY LC FUTURE CENTER NEITHER THIS SHEET NOR THE INFORMATION IT CONTAINS MAY BE USED BY OR DISCLOSED TO ANY THIRD PARTY WITHOUT PRIOR WRITTEN CONSENT OF LC FUTURE CENTER.

Title: CHARGER

Size: Custom | Document Number: NM-A861 | Rev: 1.0

Date: Monday, August 01, 2016 | Sheet 67 of 80

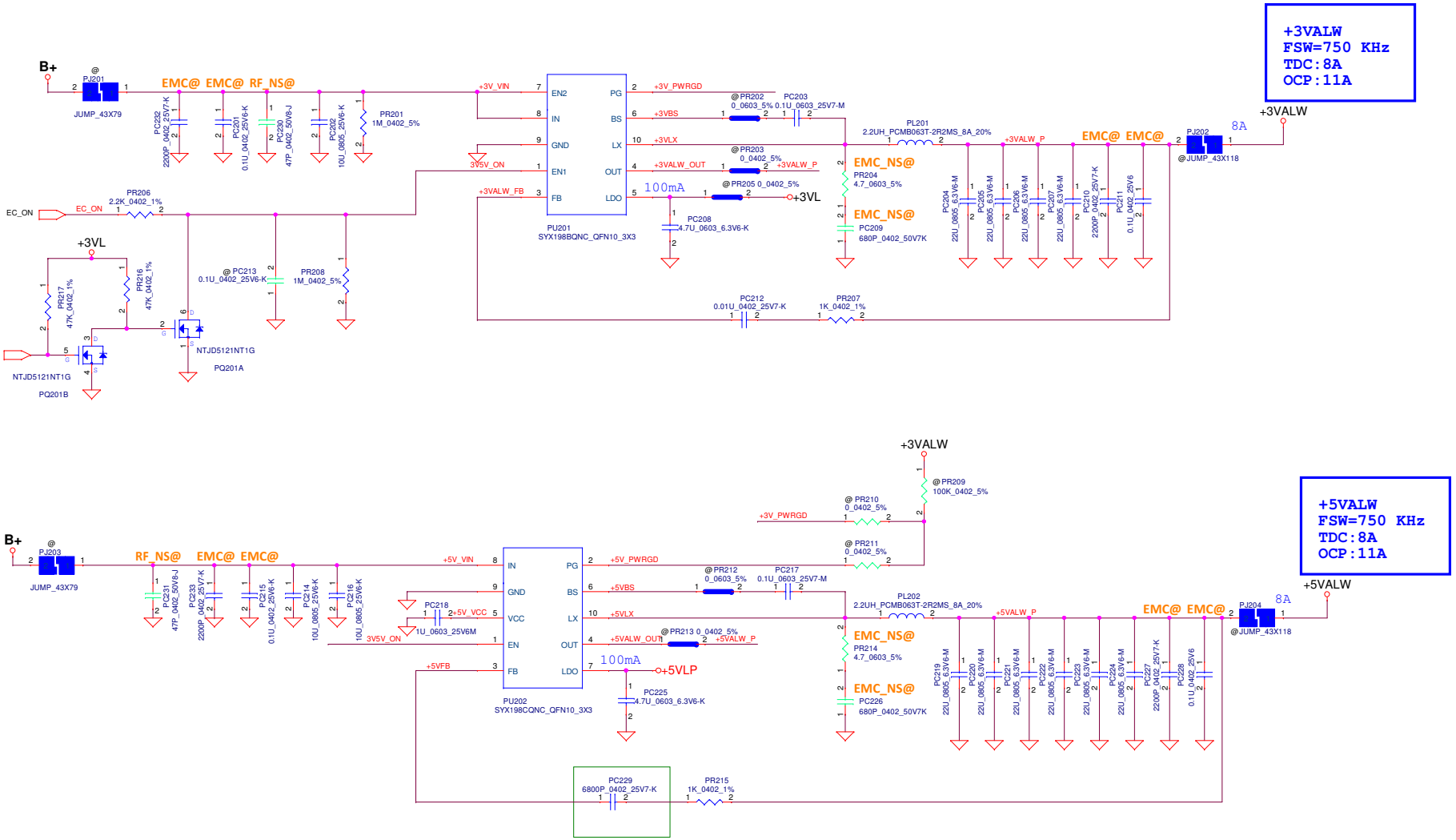

<Variant Name>

Security Classification	LC Future Center Secret Data		
Issued Date	2013/08/08	Deciphered Date	2013/08/05

THIS SHEET OF ENGINEERING DRAWING IS THE PROPRIETARY PROPERTY OF LC FUTURE CENTER. AND CONTAINS CONFIDENTIAL AND TRADE SECRET INFORMATION. THIS SHEET MAY NOT BE TRANSFERED FROM THE CUSTODY OF THE COMPETENT DIVISION OF R&D DEPARTMENT EXCEPT AS AUTHORIZED BY LC FUTURE CENTER NEITHER THIS SHEET NOR THE INFORMATION IT CONTAINS MAY BE USED BY OR DISCLOSED TO ANY THIRD PARTY WITHOUT PRIOR WRITTEN CONSENT OF LC FUTURE CENTER.

Title: 3VALWP/5VALWP

Size: Custom | Document Number: NM-A861 | Rev: 1.0

Date: Monday, August 01, 2016 | Sheet 68 of 80

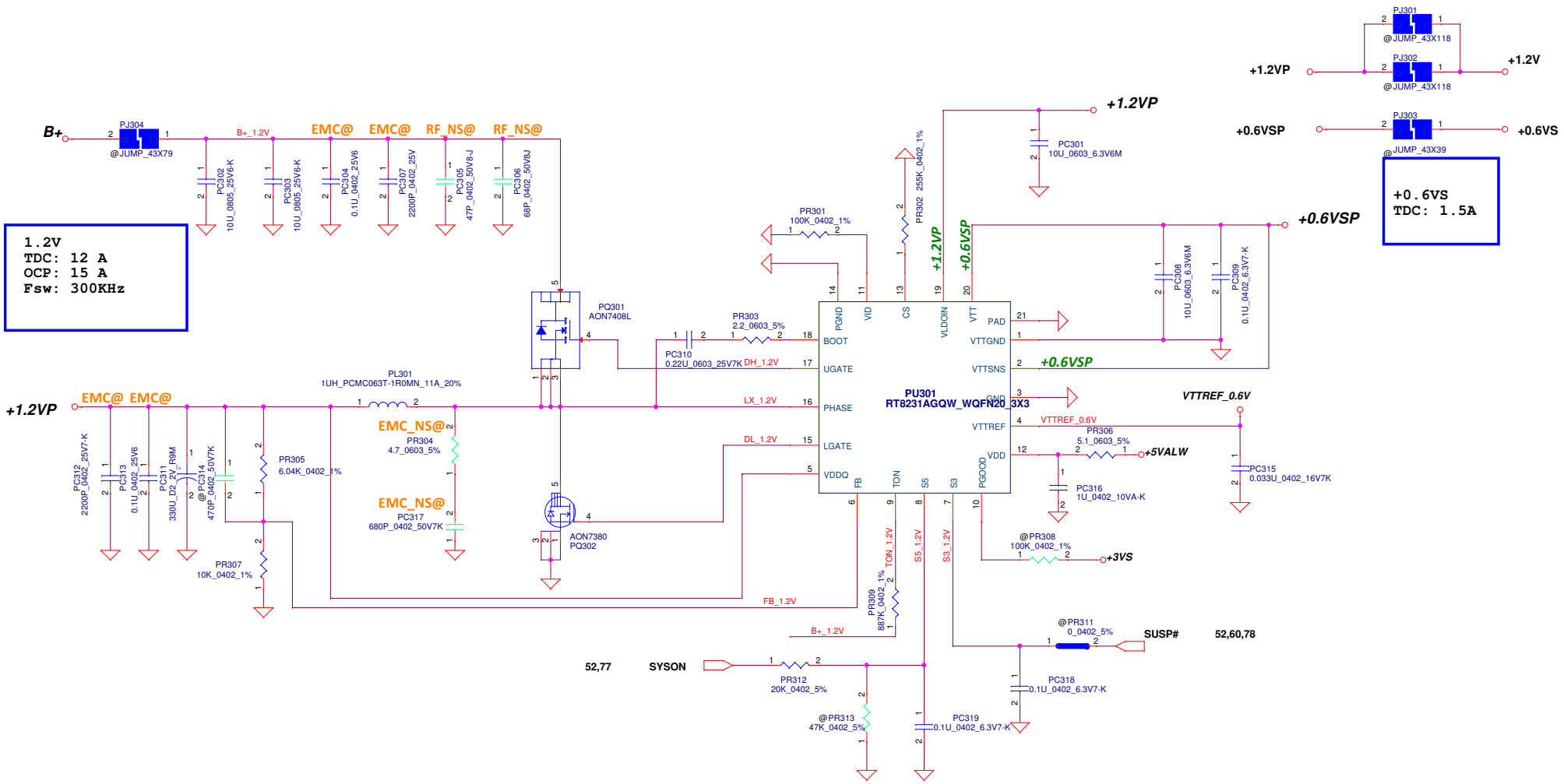

<Variant Name>

Security Classification	LC Future Center Secret Data		
Issued Date	2013/08/05	Deciphered Date	2014/12/31

THIS SHEET OF ENGINEERING DRAWING IS THE PROPRIETARY PROPERTY OF LC FUTURE CENTER. AND CONTAINS CONFIDENTIAL AND TRADE SECRET INFORMATION. THIS SHEET MAY NOT BE TRANSFERED FROM THE CUSTODY OF THE COMPETENT DIVISION OF R&D DEPARTMENT EXCEPT AS AUTHORIZED BY LC FUTURE CENTER NEITHER THIS SHEET NOR THE INFORMATION IT CONTAINS MAY BE USED BY OR DISCLOSED TO ANY THIRD PARTY WITHOUT PRIOR WRITTEN CONSENT OF LC FUTURE CENTER.

Title: +1.35V/+0.675VS

Size: Custom | Document Number: NM-A861 | Rev: 1.0

Date: Monday, August 01, 2016 | Sheet 69 of 80

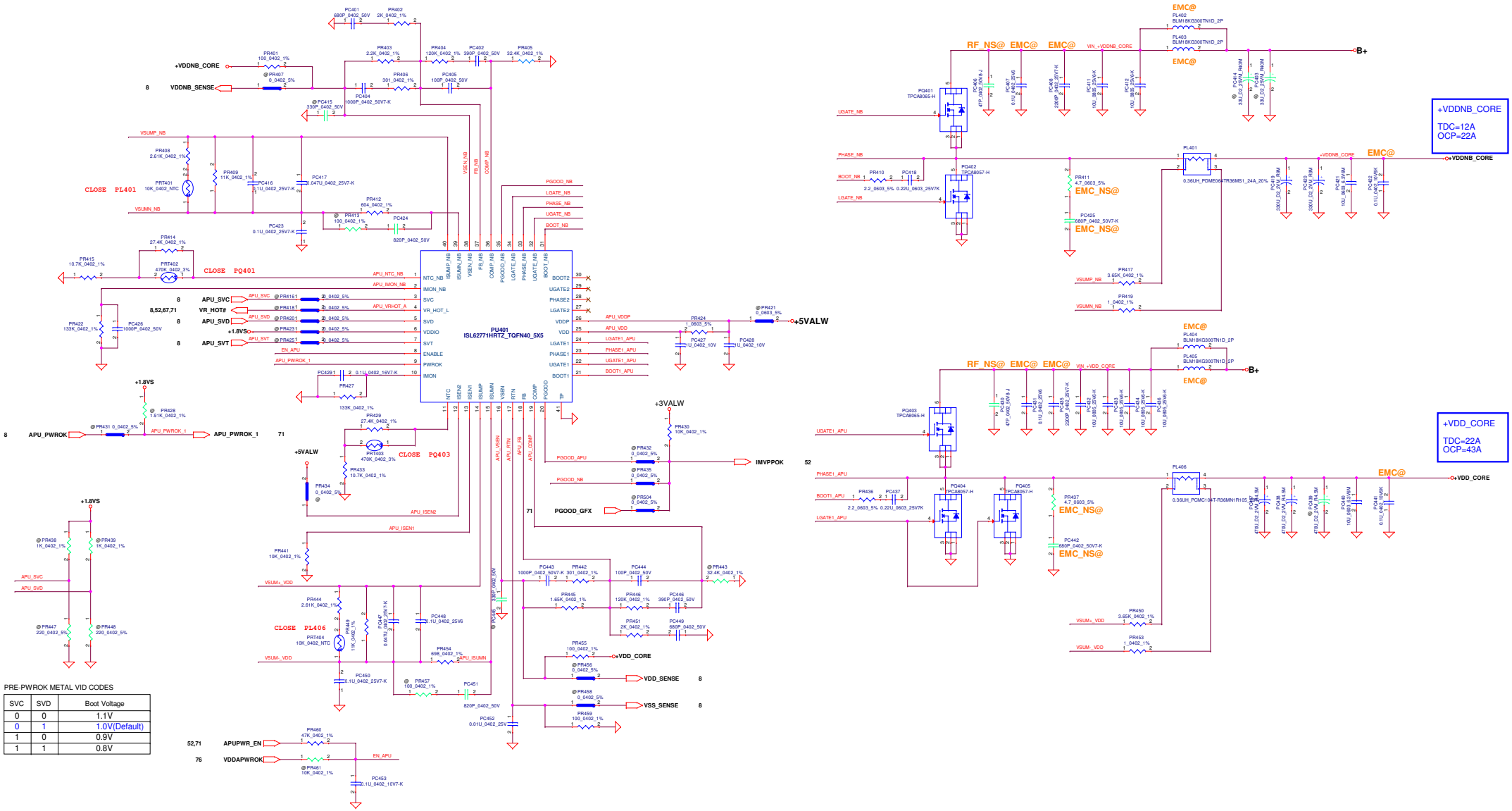

SVC	SVD	Boot Voltage
0	0	1.1V
0	1	1.0V(Default)
1	0	0.9V
1	1	0.8V

<Variant Name>

Security Classification	LC Future Center Secret Data		
Issued Date	2013/08/15	Deciphered Date	2013/08/15

THIS SHEET OF ENGINEERING DRAWING IS THE PROPRIETARY PROPERTY OF LC FUTURE CENTER, AND CONTAINS CONFIDENTIAL AND TRADE SECRET INFORMATION. THIS SHEET MAY NOT BE TRANSFERRED FROM THE CUSTODY OF THE COMPETENT DIVISION OF R&D DEPARTMENT EXCEPT AS AUTHORIZED BY LC FUTURE CENTER NEITHER THIS SHEET NOR THE INFORMATION IT CONTAINS MAY BE USED BY OR DISCLOSED TO ANY THIRD PARTY WITHOUT PRIOR WRITTEN CONSENT OF LC FUTURE CENTER.

Title: VCORE/VDDNB

Size: Custom | Document Number: NM-A861 | Rev: 1.0

Date: Monday, August 01, 2016 | Sheet 70 of 80

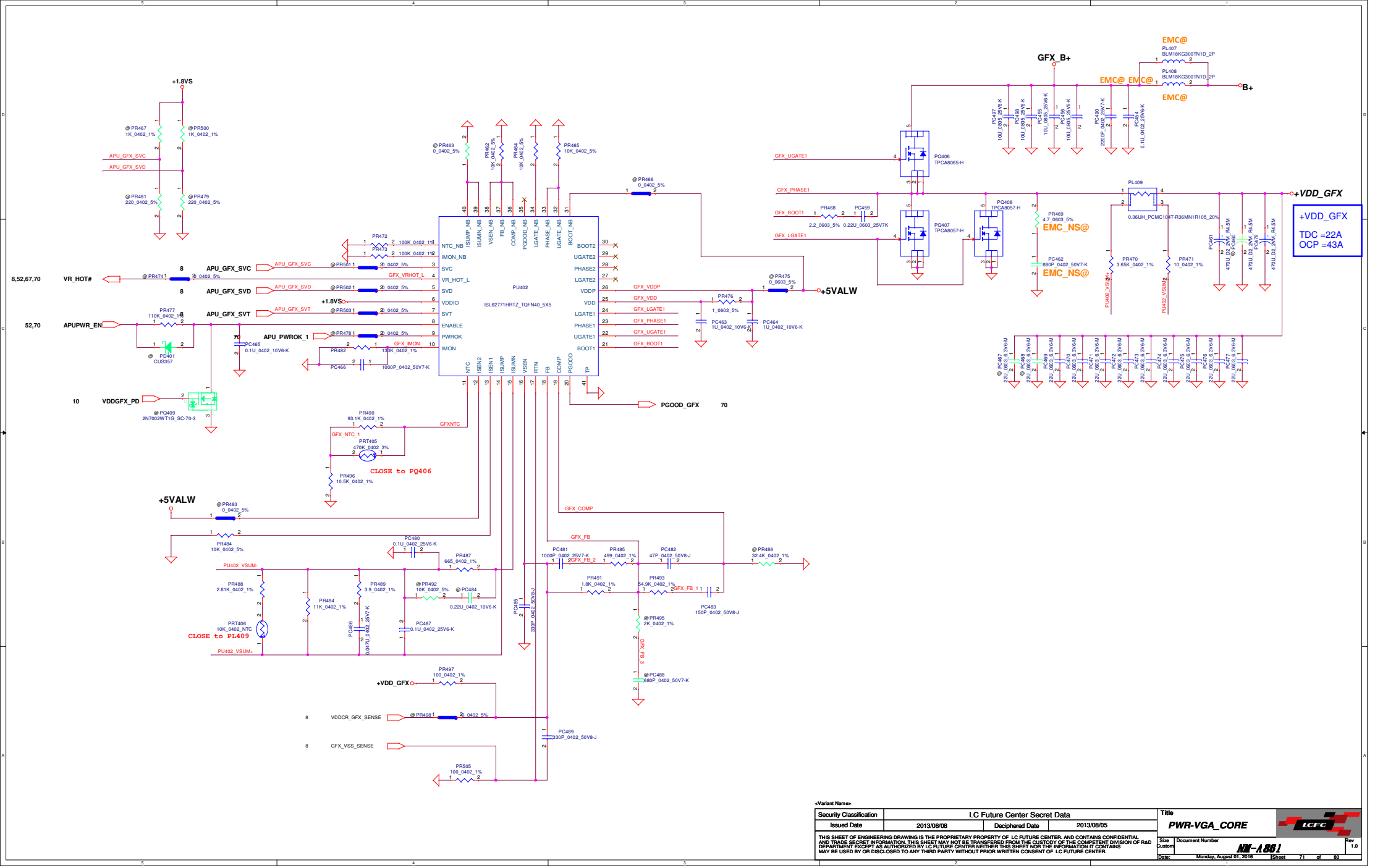

<Variant Name>

Security Classification	LC Future Center Secret Data		
Issued Date	2013/08/08	Deciphered Date	2013/08/05

THIS SHEET OF ENGINEERING DRAWING IS THE PROPRIETARY PROPERTY OF LC FUTURE CENTER. AND CONTAINS CONFIDENTIAL AND TRADE SECRET INFORMATION. THIS SHEET MAY NOT BE TRANSFERED FROM THE CUSTODY OF THE COMPETENT DIVISION OF R&D DEPARTMENT EXCEPT AS AUTHORIZED BY LC FUTURE CENTER NEITHER THIS SHEET NOR THE INFORMATION IT CONTAINS MAY BE USED BY OR DISCLOSED TO ANY THIRD PARTY WITHOUT PRIOR WRITTEN CONSENT OF LC FUTURE CENTER.

Title: PWR-VGA_CORE

Size: Custom | Document Number: NM-A861 | Rev: 1.0

Date: Monday, August 01, 2016 | Sheet 71 of 80

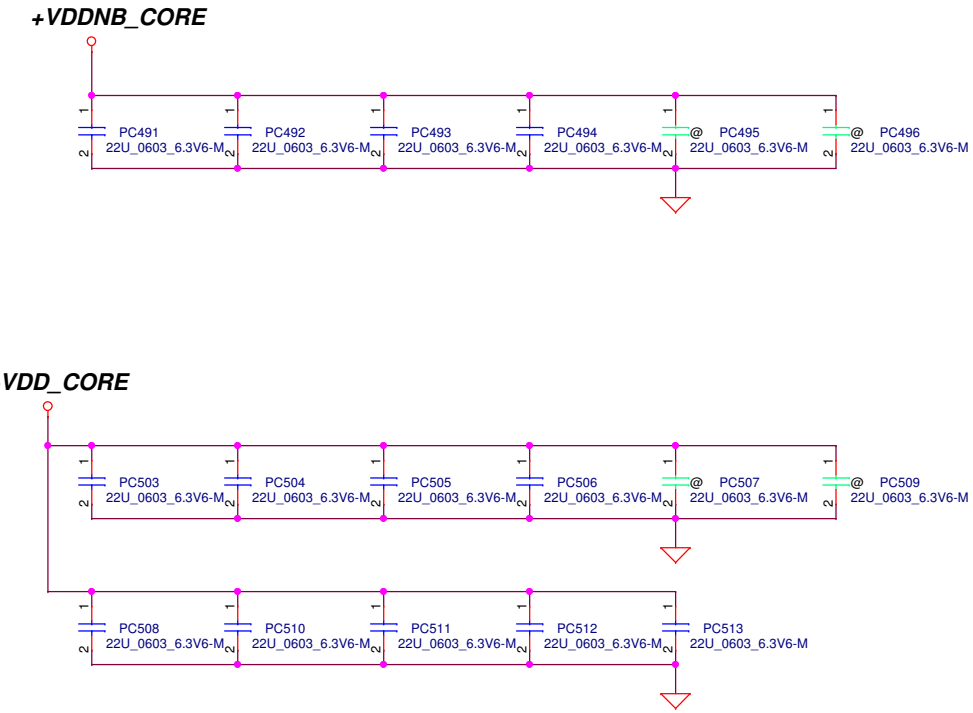

<Variant Name>

Security Classification	LC Future Center Secret Data		
Issued Date	2013/08/01	Deciphered Date	2014/08/01

THIS SHEET OF ENGINEERING DRAWING IS THE PROPRIETARY PROPERTY OF LC FUTURE CENTER. AND CONTAINS CONFIDENTIAL AND TRADE SECRET INFORMATION. THIS SHEET MAY NOT BE TRANSFERED FROM THE CUSTODY OF THE COMPETENT DIVISION OF R&D DEPARTMENT EXCEPT AS AUTHORIZED BY LC FUTURE CENTER NEITHER THIS SHEET NOR THE INFORMATION IT CONTAINS MAY BE USED BY OR DISCLOSED TO ANY THIRD PARTY WITHOUT PRIOR WRITTEN CONSENT OF LC FUTURE CENTER.

Title: VCCCPUCORE DECOUPLING

Size: B | Document Number: NM-A861 | Rev: 1.0

Date: Monday, August 01, 2016 | Sheet 72 of 80

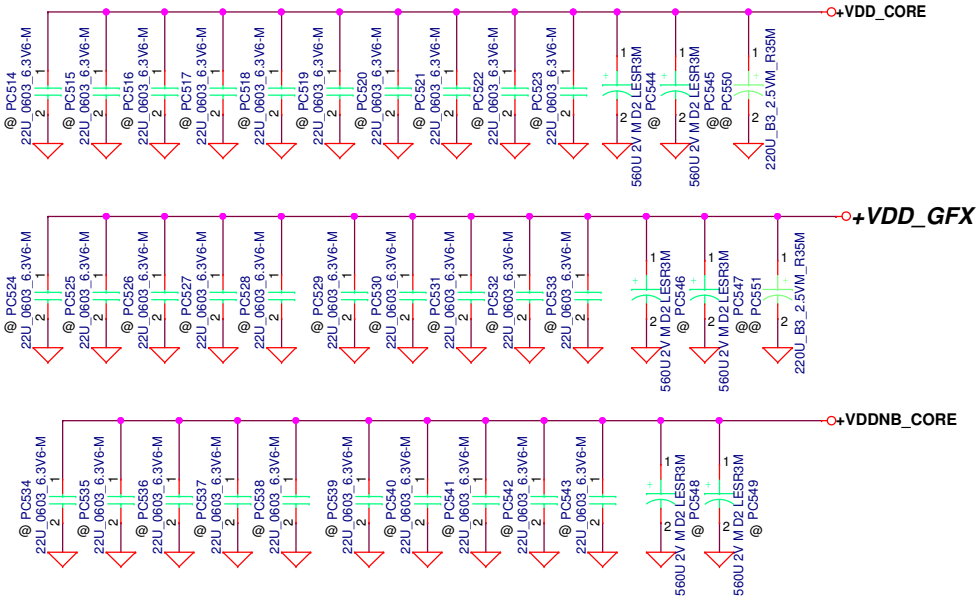

<Variant Name>

Security Classification	LC Future Center Secret Data		
Issued Date	2013/08/01	Deciphered Date	2014/08/01

THIS SHEET OF ENGINEERING DRAWING IS THE PROPRIETARY PROPERTY OF LC FUTURE CENTER. AND CONTAINS CONFIDENTIAL AND TRADE SECRET INFORMATION. THIS SHEET MAY NOT BE TRANSFERED FROM THE CUSTODY OF THE COMPETENT DIVISION OF R&D DEPARTMENT EXCEPT AS AUTHORIZED BY LC FUTURE CENTER NEITHER THIS SHEET NOR THE INFORMATION IT CONTAINS MAY BE USED BY OR DISCLOSED TO ANY THIRD PARTY WITHOUT PRIOR WRITTEN CONSENT OF LC FUTURE CENTER.

Title: VCCCPUCORE DECOUPLING

Size: B | Document Number: NM-A861 | Rev: 1.0

Date: Monday, August 01, 2016 | Sheet 73 of 80

ISL62771 Schematic for FT3 solution

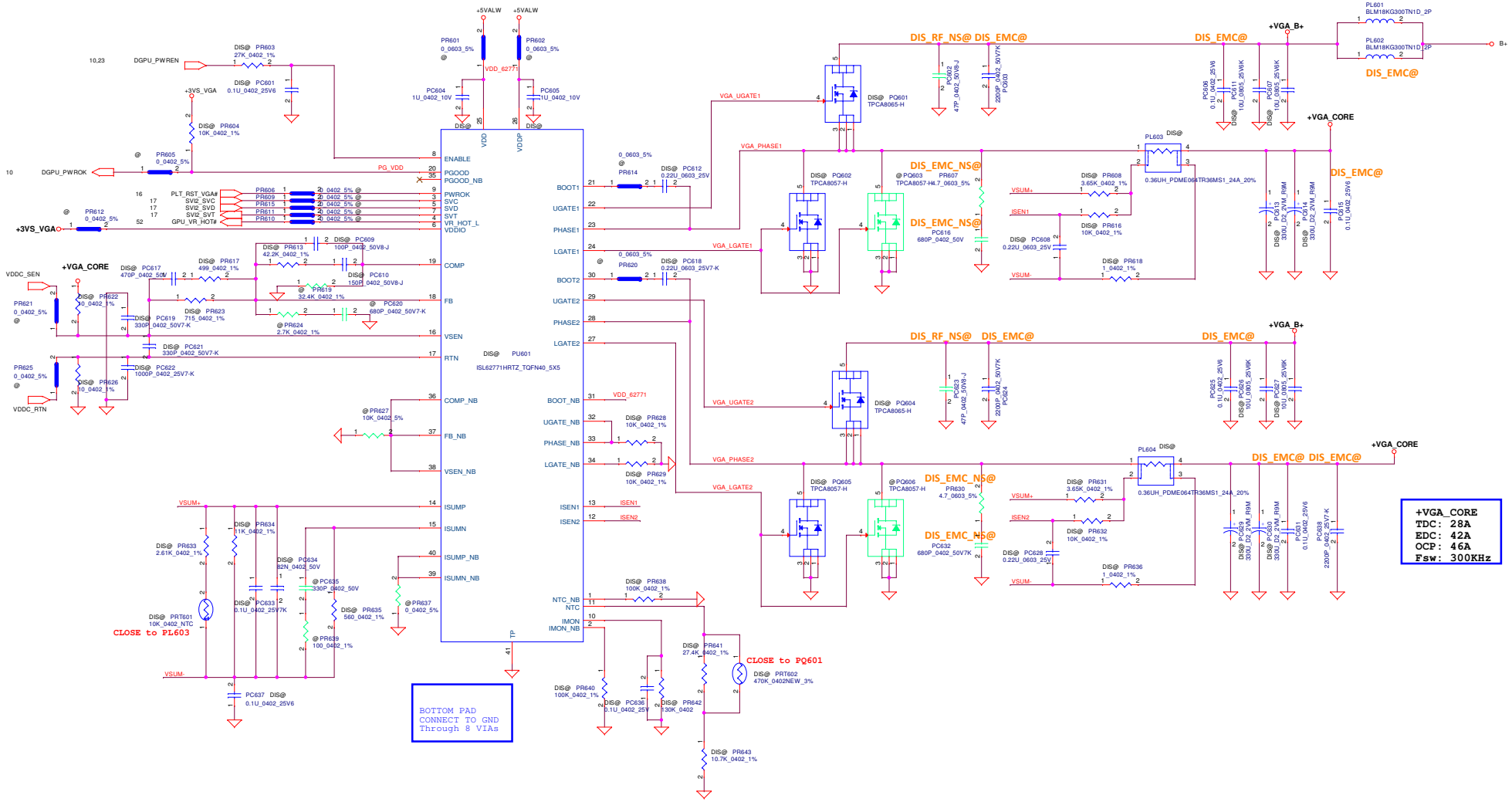

<Variant Name>

Security Classification	LC Future Center Secret Data		
Issued Date	2013/08/05	Deciphered Date	2014/12/31

THIS SHEET OF ENGINEERING DRAWING IS THE PROPRIETARY PROPERTY OF LC FUTURE CENTER. AND CONTAINS CONFIDENTIAL AND TRADE SECRET INFORMATION. THIS SHEET MAY NOT BE TRANSFERED FROM THE CUSTODY OF THE COMPETENT DIVISION OF R&D DEPARTMENT EXCEPT AS AUTHORIZED BY LC FUTURE CENTER NEITHER THIS SHEET NOR THE INFORMATION IT CONTAINS MAY BE USED BY OR DISCLOSED TO ANY THIRD PARTY WITHOUT PRIOR WRITTEN CONSENT OF LC FUTURE CENTER.

Title: +VGA_CORE

LCFC

Size	Document Number	Rev
Custom	NM-A861	1.0

Date: Monday, August 01, 2016 Sheet 74 of 80

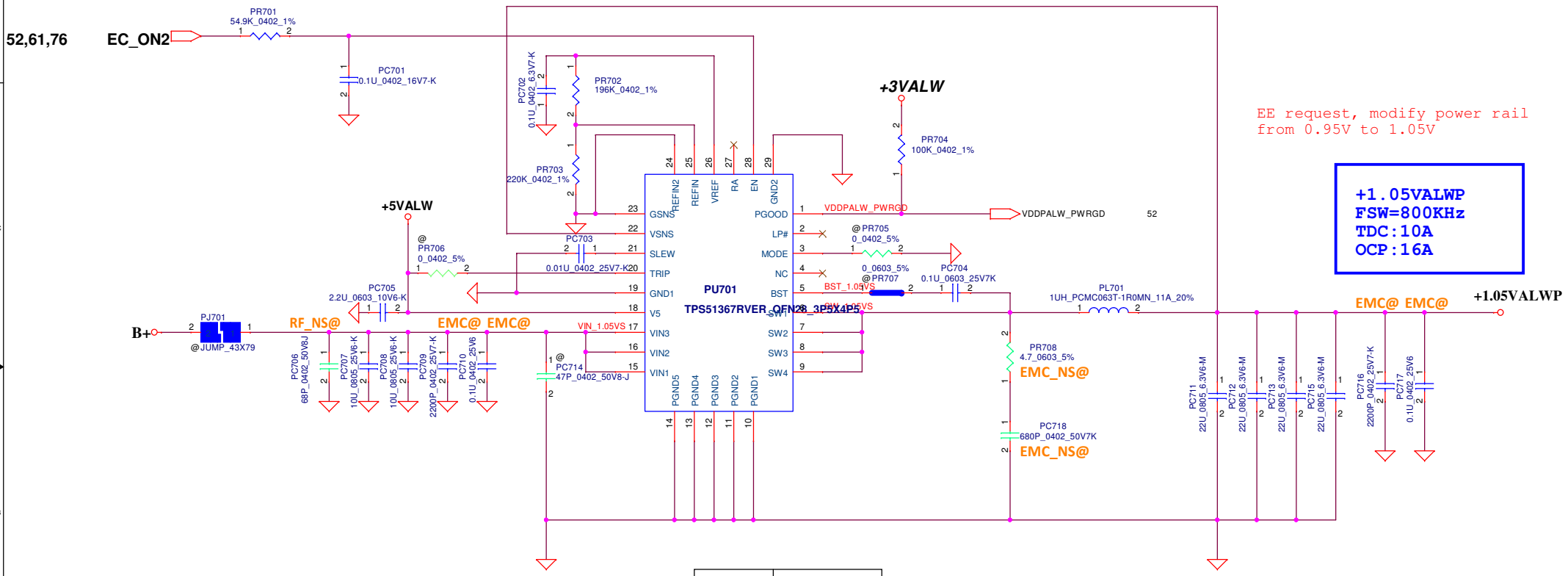

EE request, modify power rail from 0.95V to 1.05V

+1.05VALWP
FSW=800KHz
TDC:10A
OCP:16A

Mode	Frequency
GND	400KHz
Float	800KHz

<Variant Name>

Security Classification	LC Future Center Secret Data		
Issued Date	2013/08/01	Deciphered Date	2014/08/01

THIS SHEET OF ENGINEERING DRAWING IS THE PROPRIETARY PROPERTY OF LC FUTURE CENTER. AND CONTAINS CONFIDENTIAL AND TRADE SECRET INFORMATION. THIS SHEET MAY NOT BE TRANSFERED FROM THE CUSTODY OF THE COMPETENT DIVISION OF R&D DEPARTMENT EXCEPT AS AUTHORIZED BY LC FUTURE CENTER NEITHER THIS SHEET NOR THE INFORMATION IT CONTAINS MAY BE USED BY OR DISCLOSED TO ANY THIRD PARTY WITHOUT PRIOR WRITTEN CONSENT OF LC FUTURE CENTER.

Title: +1.05VALW_VDDP

Size: Custom | Document Number: NM-A861 | Rev: 1.0

Date: Monday, August 01, 2016 | Sheet 75 of 80

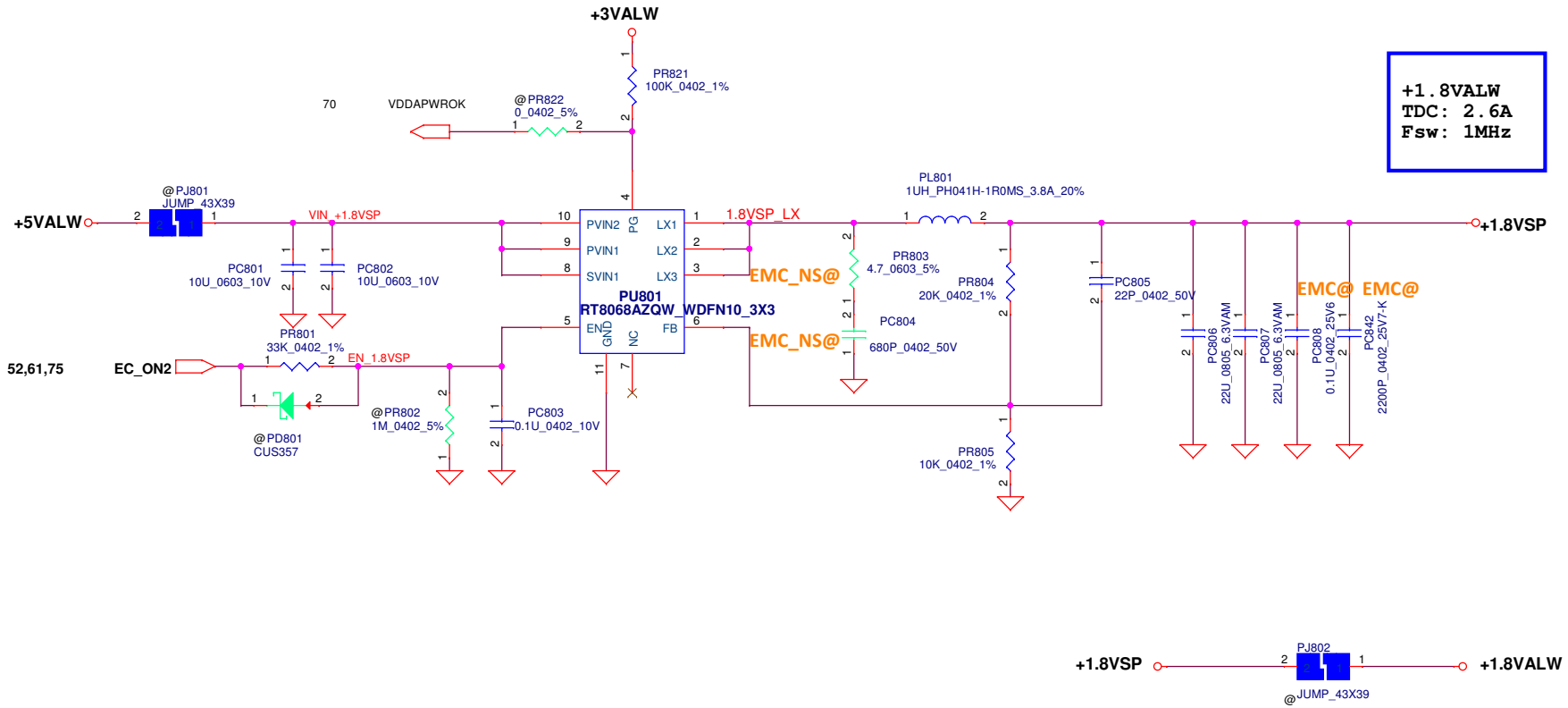

<Variant Name>

Security Classification	LC Future Center Secret Data		
Issued Date	2013/08/05	Deciphered Date	2014/12/31

THIS SHEET OF ENGINEERING DRAWING IS THE PROPRIETARY PROPERTY OF LC FUTURE CENTER. AND CONTAINS CONFIDENTIAL AND TRADE SECRET INFORMATION. THIS SHEET MAY NOT BE TRANSFERED FROM THE CUSTODY OF THE COMPETENT DIVISION OF R&D DEPARTMENT EXCEPT AS AUTHORIZED BY LC FUTURE CENTER NEITHER THIS SHEET NOR THE INFORMATION IT CONTAINS MAY BE USED BY OR DISCLOSED TO ANY THIRD PARTY WITHOUT PRIOR WRITTEN CONSENT OF LC FUTURE CENTER.

Title: *+1.8VALW*

Size: B | Document Number: *NM-A861* | Rev: 1.0

Date: Monday, August 01, 2016 | Sheet 76 of 80

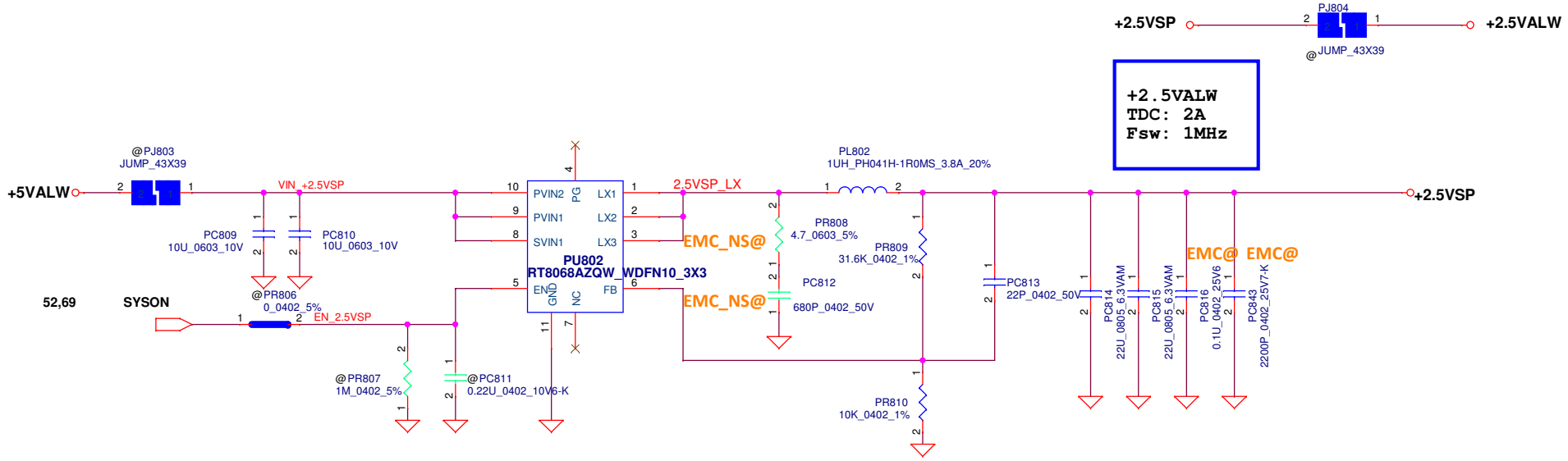

Security Classification	LC Future Center Secret Data		
Issued Date	2013/08/05	Deciphered Date	2014/12/31

THIS SHEET OF ENGINEERING DRAWING IS THE PROPRIETARY PROPERTY OF LC FUTURE CENTER, AND CONTAINS CONFIDENTIAL AND TRADE SECRET INFORMATION. THIS SHEET MAY NOT BE TRANSFERED FROM THE CUSTODY OF THE COMPETENT DIVISION OF R&D DEPARTMENT EXCEPT AS AUTHORIZED BY LC FUTURE CENTER NEITHER THIS SHEET NOR THE INFORMATION IT CONTAINS MAY BE USED BY OR DISCLOSED TO ANY THIRD PARTY WITHOUT PRIOR WRITTEN CONSENT OF LC FUTURE CENTER.

Title: +2.5VALW

Size: Custom | Document Number: NM-A861 | Rev: 1.0

Date: Monday, August 01, 2016 | Sheet 77 of 80

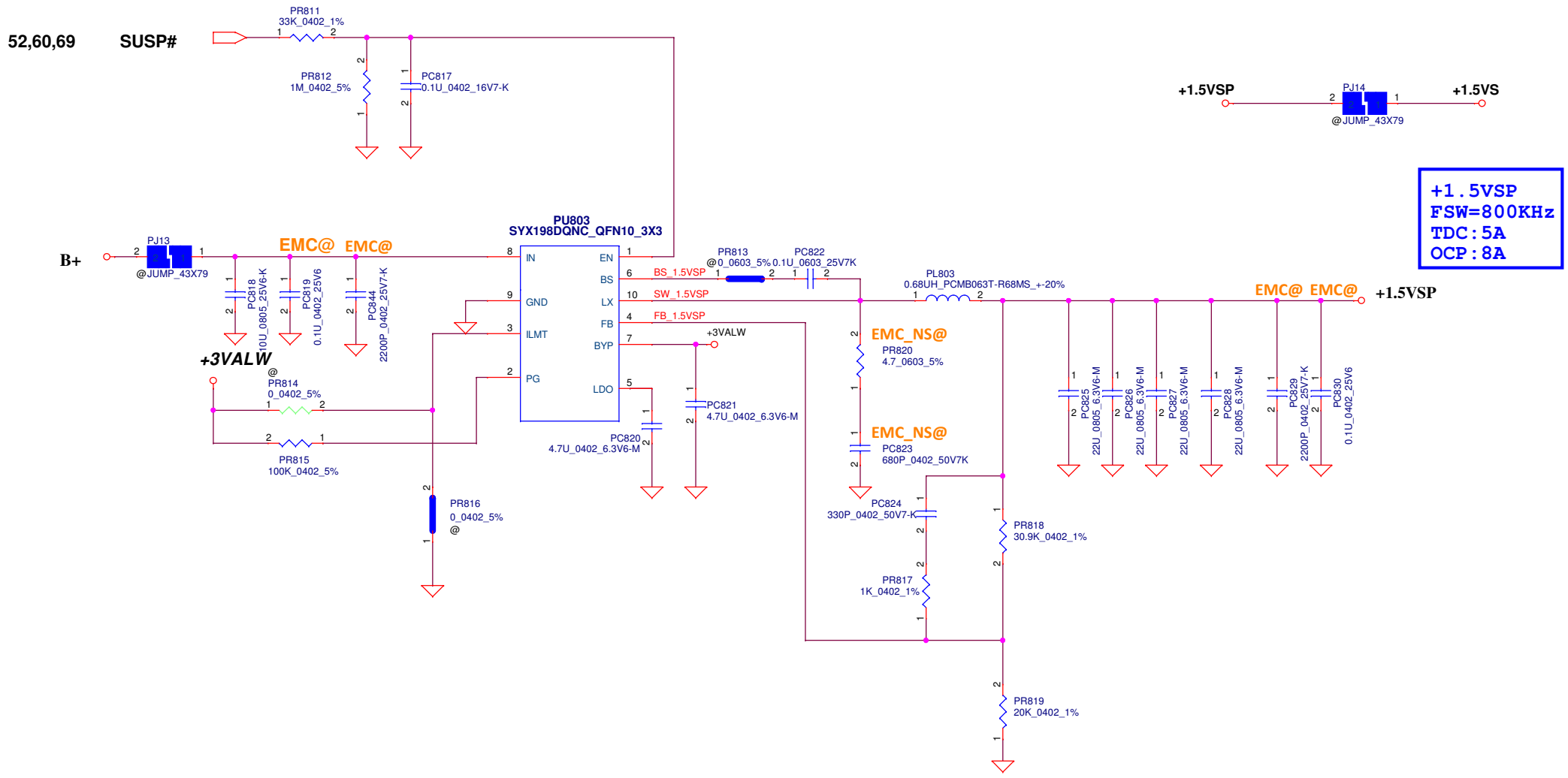

<Variant Name>

Security Classification	LC Future Center Secret Data		
Issued Date	2013/08/01	Deciphered Date	2014/08/01

THIS SHEET OF ENGINEERING DRAWING IS THE PROPRIETARY PROPERTY OF LC FUTURE CENTER. AND CONTAINS CONFIDENTIAL AND TRADE SECRET INFORMATION. THIS SHEET MAY NOT BE TRANSFERED FROM THE CUSTODY OF THE COMPETENT DIVISION OF R&D DEPARTMENT EXCEPT AS AUTHORIZED BY LC FUTURE CENTER NEITHER THIS SHEET NOR THE INFORMATION IT CONTAINS MAY BE USED BY OR DISCLOSED TO ANY THIRD PARTY WITHOUT PRIOR WRITTEN CONSENT OF LC FUTURE CENTER.

Title: +1.5VS

Size: B | Document Number: NM-A861 | Rev: 1.0

Date: Monday, August 01, 2016 | Sheet 78 of 80

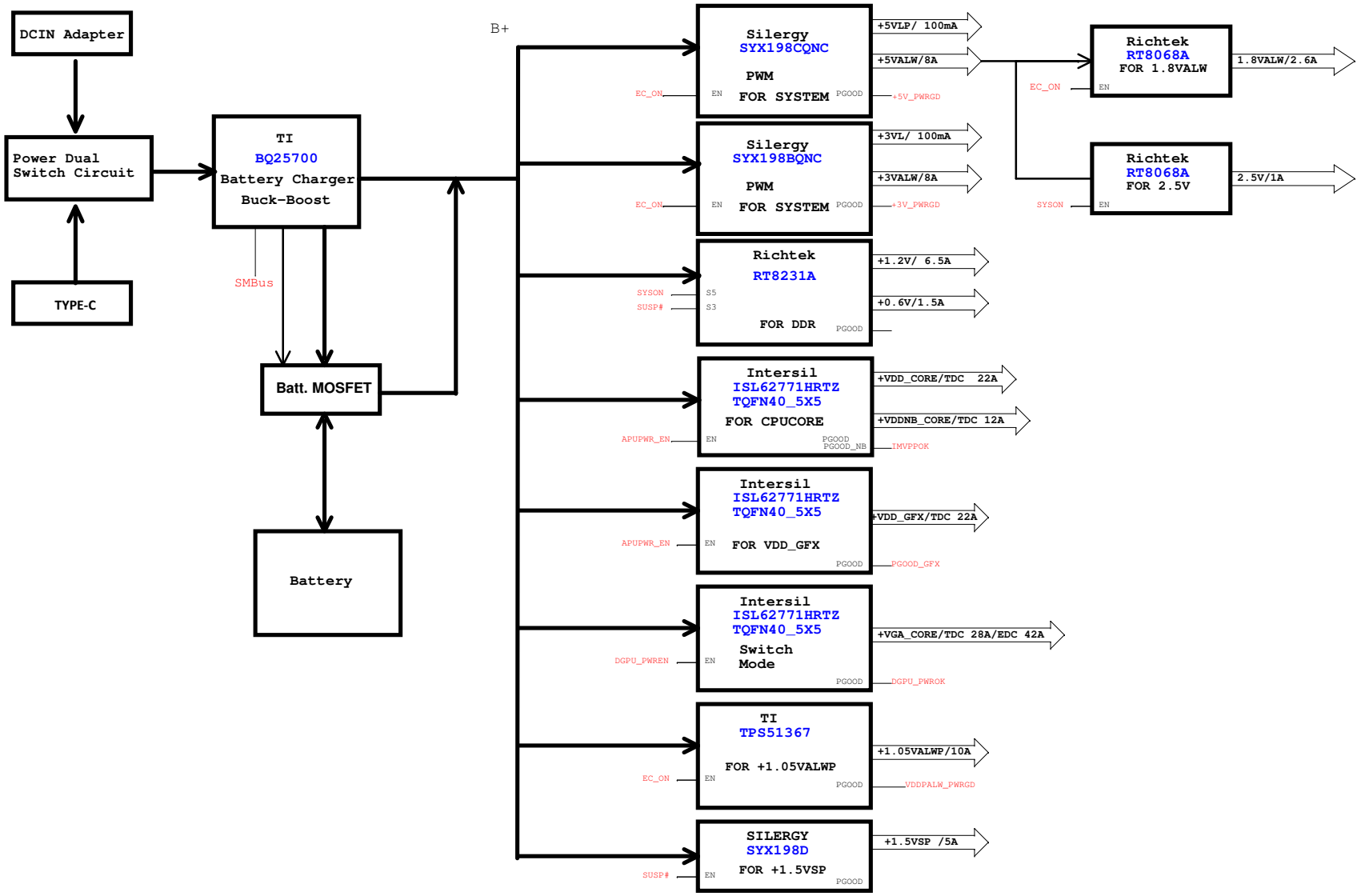
DCIN Adapter
Power Dual Switch Circuit
TYPE-C
TI
BQ25700
Battery Charger
Buck-Boost
SMBus
Batt. MOSFET
Battery
B+
Silergy
SYX198CQNC
PWM
FOR SYSTEM
EC_ON
EN
PGOOD
+5VLP/ 100mA
+5VALW/8A
+5V_PWRGD
Silergy
SYX198BQNC
PWM
FOR SYSTEM
EC_ON
EN
PGOOD
+3VL/ 100mA
+3VALW/8A
+3V_PWRGD
Richtek
RT8231A
FOR DDR
SYSON
SUSP#
S5
S3
PGOOD
+1.2V/ 6.5A
+0.6V/1.5A
Intersil
ISL62771HRTZ
TQFN40_5X5
FOR CPUCORE
APUPWR_EN
EN
PGOOD
PGOOD_NB
+VDD_CORE/TDC 22A
+VDDNB_CORE/TDC 12A
TMVPPOK
Intersil
ISL62771HRTZ
TQFN40_5X5
FOR VDD_GFX
APUPWR_EN
EN
PGOOD
+VDD_GFX/TDC 22A
PGOOD_GFX
Intersil
ISL62771HRTZ
TQFN40_5X5
Switch Mode
DGPU_PWREN
EN
PGOOD
+VGA_CORE/TDC 28A/EDC 42A
DGPU_PWROK
TI
TPS51367
FOR +1.05VALWP
EC_ON
EN
PGOOD
+1.05VALWP/10A
VDDPALW_PWRGD
SILERGY
SYX198D
FOR +1.5VSP
SUSP#
EN
PGOOD
+1.5VSP /5A
Richtek
RT8068A
FOR 1.8VALW
EC_ON
EN
1.8VALW/2.6A
Richtek
RT8068A
FOR 2.5V
SYSON
EN
2.5V/1A

<Variant Name>

Security Classification	LC Future Center Secret Data		
Issued Date	2013/09/07	Deciphered Date	2014/09/07

THIS SHEET OF ENGINEERING DRAWING IS THE PROPRIETARY PROPERTY OF LC FUTURE CENTER. AND CONTAINS CONFIDENTIAL AND TRADE SECRET INFORMATION. THIS SHEET MAY NOT BE TRANSFERED FROM THE CUSTODY OF THE COMPETENT DIVISION OF R&D DEPARTMENT EXCEPT AS AUTHORIZED BY LC FUTURE CENTER NEITHER THIS SHEET NOR THE INFORMATION IT CONTAINS MAY BE USED BY OR DISCLOSED TO ANY THIRD PARTY WITHOUT PRIOR WRITTEN CONSENT OF LC FUTURE CENTER.

Title	XXXX	LCFC
Size B	Document Number NM-A861	Rev 1.0
Date: Monday, August 01, 2016	Sheet 80 of 80	